# installation and servicing

## imax xtra

Your Ideal installation and servicing guide

See reverse for imax xtra users guide

## Models F80, F120, F160 & F200, F240, F280

When replacing any part on this appliance, use only spare parts that you can be assured conform to the safety and performance specification that we require. Do not use reconditioned or copy parts that have not been clearly authorised by Ideal Boilers.

August 2009 UIN 202441 A06

Ideal BOILERS
The High Efficiency Pioneers

**Table 1 Performance Data**

| Boiler | | | F80 | F120 | F160 | F200 | F240 | F280 |
|---|---|---|---|---|---|---|---|---|
| Boiler output (non-condensing) Mean 70°C | Max | kW | 77.9 | 116.9 | 155.8 | 195.4 | 234.5 | 273.6 |
| | | Btu/h | 265,800 | 398,900 | 531,600 | 666,700 | 800,100 | 933,500 |
| | Min | kW | 23.3 | 23.3 | 29.1 | 43.1 | 47.0 | 51.0 |
| | | Btu/h | 79,500 | 79,500 | 99,300 | 147,050 | 160,350 | 174,000 |
| Boiler output (condensing) Mean 40°C | Max | kW | 82.2 | 123.4 | 164.5 | 207.8 | 249.4 | 290.9 |
| | | Btu/h | 280,450 | 421,050 | 561,250 | 709,000 | 850,950 | 992,550 |
| | Min | kW | 25.8 | 25.8 | 32.3 | 47.3 | 51.6 | 55.9 |
| | | Btu/h | 88,000 | 88,000 | 110,200 | 161,400 | 176,050 | 190,750 |
| Boiler Input Max Rate | Net | kW | 80 | 120 | 160 | 200 | 240 | 280 |
| | | Btu/h | 272,950 | 409,450 | 545,900 | 682,400 | 818,900 | 955,350 |
| | Gross | kW | 88.8 | 133.3 | 177.7 | 222.1 | 266.5 | 310.9 |
| | | Btu/h | 303,000 | 454,800 | 606,300 | 757,800 | 909,300 | 1,060,800 |
| Boiler Input Min Rate | Net | kW | 24 | 24 | 30 | 44 | 48 | 52 |
| | | Btu/h | 81,900 | 81,900 | 102,350 | 150,150 | 163,800 | 177,400 |
| | Gross | kW | 26.6 | 26.6 | 33.3 | 48.9 | 53.3 | 57.7 |
| | | Btu/h | 90,750 | 90,750 | 113,600 | 166,850 | 181,850 | 196,850 |
| Maximum Gas Rate | | $m^3/h$ | 8.1 | 12.1 | 16.1 | 20.1 | 24.2 | 28.2 |
| | | $ft^3/h$ | 286 | 427 | 569 | 710 | 855 | 996 |
| Approx. flue gas volume (@80°C) i.e. non-condensing | @ max. rate | $m^3/h$ | 121 | 182 | 242 | 302 | 363 | 423 |
| | | $ft^3/h$ | 4,270 | 6,410 | 8,550 | 10,690 | 12,820 | 14,960 |
| Max. Flue Resistance | | Pa | 100 | 100 | 150 | 150 | 150 | 150 |
| Flue Gas $CO_2$ G20/LNG | @ Max Rate | % | 9.3/9.8 | 9.3/9.8 | 9.3/9.8 | 9.3/9.8 | 9.3/9.8 | 9.3/9.8 |
| | @ Min. Rate | % | 9.1/9.6 | 9.1/9.6 | 9.1/9.6 | 9.1/9.6 | 9.1/9.6 | 9.1/9.6 |
| NOx with $O_2$ = 0% | | mg/kWh | 26 | 26 | 35 | 26 | 26 | 26 |
| | | ppm | 15 | 15 | 20 | 15 | 15 | 15 |
| Seasonal Boiler Efficiency (Building Regs L2) | | | 95.1 | 95.1 | 95.1 | 95.2 | 95.2 | 95.2 |

**Table 2 General Data**

| Boiler | | F80 | F120 | F160 | F200 | F240 | F280 |
|---|---|---|---|---|---|---|---|
| Gas supply | | 2H - G20 - 20mbar | | | | | |
| Gas supply connection | R (in. BSP) | 1 | 1 | 1 | 1 | 1 | 1 |
| Flow connection | R (in. BSP) | 2 | 2 | 2 | 2 | 2 | 2 |
| Return connection | R (in. BSP) | 2 | 2 | 2 | 2 | 2 | 2 |
| Hydraulic Resistance @ 20°C | mbar | 80 | 85 | 90 | 95 | 100 | 105 |
| Max Press (sealed system) | bar (psi) | 6 (87) | 6 (87) | 6 (87) | 6 (87) | 6 (87) | 6 (87) |
| Maximum Static Head | m (ft) | 61 (200) | 61 (200) | 61 (200) | 61 (200) | 61 (200) | 61 (200) |
| Boiler Electricity Supply | | 230V - 50Hz | | | | | |
| Boiler Fuse Rating | | External: 3A* Internal: 2AT, 4AT | | External: 5A* Internal: 2AT, 4AT | | | |
| Power Consumption (boiler only) | W | 250 | 250 | 400 | 400 | 400 | 400 |
| Air Inlet | O/D mm | 110 | 110 | 110 | 110 | 110 | 110 |
| Flue Size dia | mm | 150 | 150 | 150 | 200 | 200 | 200 |
| Condensate drain | mm | 21.5 | 21.5 | 21.5 | 21.5 | 21.5 | 21.5 |
| Boiler dry weight (unpacked) | kg (lb) | 132 (291) | 150 (331) | 168 (370) | 198 (437) | 215 (474) | 233 (514) |
| Water Content | l (gal) | 11.0 (2.4) | 14.3 (3.2) | 17.5 (3.9) | 18.4 (4.1) | 24.0 (5.3) | 27.2 (6.0) |

** Electricity supply and Fuse rating for pumps etc. refer to manufacturer's instructions.*

**Note**.

*Natural gas consumption is calculated using a calorific value of 37.8MJ/m³ (1038Btu/ft³) gross or 34 MJ/m³ (910 Btu/ft³) nett at 15°C and 1013.25 mbar.*

a. *For l/s divide the gross heat input (kW) by the gross C.V. of the gas (MJ/m³)*

b. *For ft/h³ divide the gross heat input (Btu/h) by the gross C.V. of the gas (Btu/ft³).*

## HEALTH & SAFETY DOCUMENT NO. 635

**The electricity at work regulations, 1989**. The manufacturer's notes must NOT be taken, in any way, as overriding statutory obligations.

**IMPORTANT**. These appliances are CE certified for safety and performance. It is, therefore, important that no external control devices, e.g. flue dampers, economisers etc., are directly connected to these appliances unless covered by these Installation and Servicing Instructions or as otherwise recommended by **Ideal Stelrad Group** in writing. If in doubt please enquire.

Any direct connection of a control device not approved by **Ideal Stelrad Group** could invalidate the certification and the normal appliance warranty. It could also infringe the Gas Safety Regulations and the above regulations.

**CAUTION. To avoid the possibility of injury during the installation, servicing or cleaning of this appliance, care should be taken when handling edges of sheet steel components.**

# CONTENTS


**Boiler Assembly - exploded view**. ..... 10

**Boiler Clearances**. ..... 8

**Boiler Dimensions**. ..... 7

**Commissioning and Testing**. ..... 31

**Electrical Connections**. ..... 13

**Electrical Supply**. ..... 6

**Fault Finding**. ..... 42

**Flue Installation**. ..... 5

**Gas Safety Regulations** ..... 4

**Gas Supply**. ..... 4

**Hydraulic Resistance**. ..... 2

**Initial Lighting**. ..... 31

**Installation**. ..... 10

**Locating/Levelling the Boiler**. ..... 11

**Option Kits**. ..... 4

**Performance Data**. ..... 2

**Servicing**. ..... 32

**Short List of Parts**. ..... 45

**Ventilation**. ..... 8

**Water Circulation**. ..... 5

**Water Connections**. ..... 7

**Water System Requirements**. ..... 9

**Water Treatment**. ..... 6

**Wiring Diagrams**. ..... 16


**imax xtra**
**Natural Gas only**
**PI No**. 0063 BR 3123
**Destination Countries:** GB, IE

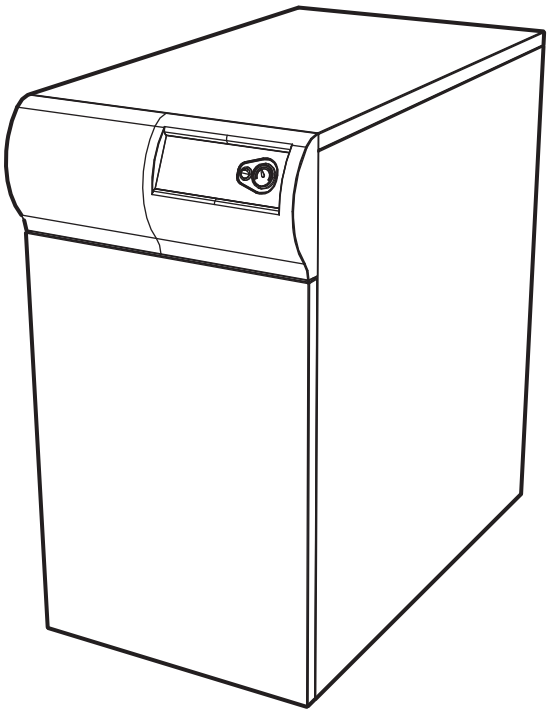

**Key to symbols**

| | |
|---|---|
| IE = Ireland, GB = | United Kingdom (Countries of destination) |
| PMS = | Maximum operating pressure of water |
| C53 = | A room sealed appliance which is connected via its separate ducts to two terminals that may terminate in zones of different pressure. |
| C63 = | A room sealed appliance intended to be connected to a separately approved and marketed system for the supply of combustion air and discharge of combustion products. The fan is up stream of the combustion chamber. |
| B23 = | An appliance intended to be connected to a flue which evacuates the products of combustion to the outside of the room containing the boiler. The combustion air is drawn directly from the room. The fan is up stream of the combustion chamber. |

**NOTE TO THE INSTALLER: LEAVE THESE INSTRUCTIONS ADJACENT TO THE GAS METER.**

## INTRODUCTION

The *imax xtra* boilers are fully automatically controlled, floor standing, fanned, super efficient condensing appliances.

The comprehensive boiler controls built into the appliance include:

- Volt free 'alarm' contacts (lockout)
- Volt free 'boiler run' contacts
- Burner hours run meters
- System temperatures

The boilers can draw their combustion air from the room or via ducting from outside.

Through a sophisticated control system combined with premix burner technology and an aluminium heat exchanger, the boilers are capable of high operating efficiencies of 93% (gross) and low emissions.

These boilers are certified to meet the requirements of the EC Gas Appliance Directive, Boiler Efficiency Directive, EMC and Low Voltage Directive.

## OPTIONAL EXTRA KITS

- **BMS (0-10V) Kit**
- **Control Interface Kit**
- **DHW Sensor Kit**
- **Modulating Sequencer Kit**
- **Outside Sensor Kit**
- **Room Sensor Kit**
- **Tank Sensor Kit**

## SAFETY

### Current Gas Safety (Installation and Use) Regulations or rules in force

The appliance is suitable only for installation in GB and IE and should be installed in accordance with the rules in force.

In GB, the installation must be carried out by a CORGI Registered Installer or in IE by a competent person. It must be carried out in accordance with the relevant requirements of the:

- Gas Safety (Installation and Use) Regulations
- The appropriate Building Regulations either The Building Regulations, The Building Regulations (Scotland), Building Regulations (Northern Ireland).
- The Water Fittings Regulations or Water byelaws in Scotland.
- The Current I.E.E. Wiring Regulations.

Where no specific instructions are given, reference should be made to the relevant British Standard Code of Practice.

In IE, the installation must be carried out by a Competent Person and installed in accordance with the current Building Regulations and reference should be made to the current ETCI rules for electrical installation.

The boilers have been tested and certified by Gastec to EN483 and EN677 for use with Natural Gas.

Detailed recommendations are contained in the following Standards and Codes of Practice:

| | |
|---|---|
| BS. 5854 | Flue and flue Structures in Buildings. |
| BS. 6644 | Installation of gas fired hot water boilers of rated inputs between 70kW and 1.8MW (net) (2nd and 3rd family gases). |
| BS. 6880 | Low temperature hot water heating systems of output greater than 45kW. |
| Part 1 | Fundamental and design considerations. |
| Part 2 | Selection of equipment. |
| Part 3 | Installation, commissioning and maintenance. |
| IGE/UP/1 | Soundness testing and purging of industrial and commercial gas installations. |
| IGE/UP/2 | Gas installation pipework, boosters and compressors on industrial and commercial premises. |
| IGE/UP/10 | Installation of gas appliances in industrial and commercial premises. |

## SAFE HANDLING OF SUBSTANCES

No asbestos, mercury or CFCs are included in any part of the boiler or its manufacture.

## FOUNDATION / LOCATION OF BOILER

The boiler must stand on a floor which must be flat, level and of a suitable load bearing capacity to support the weight of the boiler (when filled with water) and any ancillary equipment.

Ideally the boiler should be placed on a plinth exceeding the plan area of the boiler by 75mm on each side and at least 100mm high.

**The boiler must not be fitted outside.**

## GAS SUPPLY

The local gas supplier should be consulted, at the installation planning stage, in order to establish the availability of an adequate supply of gas. An existing service pipe must NOT be used without prior consultation with the local gas supplier.

A gas meter can only be connected by the local gas supplier or by a registered CORGI engineer or in IE by a competent person.

An existing meter should be checked, preferably by the gas supplier, to ensure that the meter is adequate to deal with the rate of gas supply required. A minimum working gas pressure of 15mbar MUST be available at the boiler inlet for Natural gas.

Do not use pipes of smaller size than the boiler inlet gas connection.

The complete installation MUST be tested for gas soundness and purged in accordance with the appropriate standards.

**Gas Boosters**

A gas booster is required if the gas pressure available at the boiler is lower than that required by the boiler manufacturer to attain the flow rate for maximum burner input rating.

Location of the booster requires careful consideration but should preferably be closer to the burner rather than the gas meter. Ventilation should also be considered to ensure ambient temperature do not exceed designed recommendations. Further guidance is provided in IGE/UP/2.

## FLUE INSTALLATION

**IMPORTANT.** It is the responsibility of the installer to ensure, in practice, that products of combustion discharging from the terminal cannot re-enter the building or any other adjacent building through ventilators, windows, doors, other sources of natural air infiltration, or forced ventilation / air conditioning.

If this should occur the appliance MUST be isolated from the gas supply and labelled as 'unsafe' until corrective action can be taken.

**Terminal Position**

Due to the high efficiency of the boilers pluming will occur. Vertical termination is recommended and terminal positions which could cause problems should be avoided. Particular care should be taken in the case of large output boiler installations, and complying with the requirements of the Clean Air Act.

The flue must be installed in accordance with the appropriate Building Regulations and standards listed on page 4 and in compliance with BS6644. In IE refer to I.S.820:2000.

## FLUE SYSTEM DESIGN

Due to the high efficiency of these boilers, the flue gas temperatures are low and the buoyancy in the stack will be relatively small. The boiler is supplied with an integral fan which is fully matched to the boiler in each case to provide correct combustion air flow and overcome the flue resistance.

The power of this fan is such that there is a large reserve of pressure available to overcome a significant length of flue without affecting the combustion performance of the boiler. The maximum pressure available at the base of the flue to overcome flue resistance is 100Pa (0.4" w.g.) for F80 and F120, and 150Pa (0.6" w.g.) for F160, F200, F240 and F280. This includes the resistance of any air ducts used to connect the air inlet direct to outside air. Care should be taken with tall flue systems to ensure excess buoyancy is not created. A negative pressure must not be created at the boiler flue outlet.

See table below for approximate maximum straight flue lengths.

| Boiler | F80 | F120 | F160 | F200 | F240 | F280 |
|---|---|---|---|---|---|---|
| Flue Size (mm) | Ø150 | Ø150 | Ø150 | Ø200 | Ø200 | Ø200 |
| Approx. max. Straight Flue Length (m) | 240 | 109 | 100 | 256 | 180 | 138 |

If the high level air inlet kit, supplied with this appliance, is to be utilised, the following table shows approximate maximum straight flue lengths and pressures available.

| Boiler | F80 | F120 | F160 | F200 | F240 | F280 |
|---|---|---|---|---|---|---|
| Flue Size (mm) | Ø150 | Ø150 | Ø150 | Ø200 | Ø200 | Ø200 |
| Approx. max. Straight Flue Length (m) | 235 | 105 | 50 | 136 | 72 | 46 |
| Flue Pressure (Pa) | 98 | 97 | 76 | 80 | 60 | 50 |

The addition of elbows and their positions in the flue will have a significant effect on the maximum flue length. Consult with your flue supplier for detailed design work.

.***IMPORTANT NOTE.***

**If combustion air is drawn from within the boiler room, ensure no dust or airborne debris can be ingested into the appliance. Dusty concrete flooring should be sealed to reduce the presence of dust. Ideally where possible duct the air supply into the boiler room from a clean source outside the boiler room/building.**

**Material**

With no requirement for buoyancy to discharge flue products and with low flue gas temperatures, single wall flues are suitable for most installations. Care should still be taken to maintain compliance with building regulations and relevant standards.

The type of flue pipe used should be aluminium, 316 grade Stainless Steel or be of equivalent corrosion resistance **unless the flue is manufactured from aluminium, the condensate from the flue must be collected and drained before entering the sump of the boiler**. Advice regarding the availability of proprietary types of flue system can be obtained by contacting **Ideal Stelrad Group**. All joints or connections in the flue system must be impervious to condensate leakage. Low points in the flue system should be drained using pipe of material resistant to condensate corrosion. All drains in the flue should incorporate a water trap.

Care should also be taken in the selection of flue terminals as these tend to accentuate the formation of a plume and could freeze in cold weather conditions.

Care should be taken to ensure the specification of the chimney is suitable for the application by reference to the manufacturers literature.

## WATER CIRCULATION SYSTEM

A circulation pump MUST be connected to the boiler, see below.

The boiler must NOT be used for direct hot water supply. The hot water storage cylinder MUST be of the indirect type.

Single feed, indirect cylinders are not recommended and MUST NOT be used on sealed systems.

The appliances are NOT suitable for gravity central heating nor are they suitable for the provision of gravity domestic hot water.

The hot water cylinder and ancillary pipework, not forming part of the useful heating surface, should be lagged to prevent heat loss and any possible freezing - particularly where pipes run through roof spaces and ventilated underfloor spaces.

The boiler must be vented. There must be no low points between the boiler flow connection and a system vent point, which should be positioned as close as practically possible to the boiler flow connection.

Draining taps MUST be located in accessible positions, which permit the draining of the whole system - including the boiler and hot water storage vessel. They should be at least 1/2" BSP nominal size and be in accordance with BS. 2879. Do not use the boiler drain tap to drain the system as this can induce sludge into the heat exchanger.

The central heating system should be in accordance with the relevant standards listed on page 4.

Due to the compact nature of the boiler the heat stored within the castings at the point of shutdown of the burner must be dissipated into the water circuit in order to avoid overheating. In order to allow pump operation after burner shutdown the boiler control box incorporates a 5 minute pump overrun facility. In order to make use of this, a pump must be supplied from the terminals inside the boiler. Note: for pumps requiring greater than 1.0 amp current, they must be connected via a relay.

When sizing pumps, reference should be made to the Hydraulic Resistance Table on page 6 which show the boiler resistance against flow rates, to achieve the required temperature differential.

Flow rates for common systems using either 11°C or 20°C temperature differentials are given in the table below.

| | Water flow rate temp. difference 11°C (20°F) | | Water flow rate temp. difference 20°C (36°F) | |
|---|---|---|---|---|
| | l/s | $m^3/h$ | l/s | $m^3/h$ |
| **F80** | 1.78 | 6.41 | 0.98 | 3.53 |
| **F120** | 2.68 | 9.65 | 1.47 | 5.3 |
| **F160** | 3.57 | 12.85 | 1.96 | 7.06 |
| **F200** | 4.51 | 16.24 | 2.48 | 8.93 |
| **F240** | 5.42 | 19.51 | 2.98 | 10.73 |
| **F280** | 6.32 | 22.75 | 3.47 | 12.49 |

**Note**.

- *With the boiler firing at maximum rate, the temperature differential should not be less than 10°C. High flow rates required for lower temperature differentials could lead to erosion of the heat exchanger water ways.*
- *With the boiler firing at minimum rate, the temperature differential should not be greater than 35°C. Lower flow rates generating higher temperature differentials will lead to lock out of the boiler.*
- *The lower the return temperature to the boiler, the higher the efficiency. At return temperatures of 55°C and below, the difference becomes marked because the water in the flue gases starts to condense, releasing its latent heat.*

In installations where all radiators have been provided with thermostatic radiator valves, it is essential that water circulation through the boiler is guaranteed. A mixing header will perform this task. Alternatively this can be best achieved by means of a differential pressure valve, which is installed in a bypass between the flow and return pipes. The bypass should be fitted at least 6m from the boiler, and should be capable of allowing a minimum flow rate to achieve a temperature differential of no greater than 35°C at minimum rate.

## WATER TREATMENT

**These boilers incorporate an ALUMINIUM heat exchanger**.

**IMPORTANT.** The application of any other treatment to this product may render the guarantee of **Ideal Stelrad Group** INVALID.

**Ideal Stelrad Group** recommend Water Treatment in accordance with Guidance Notes on Water Treatment in Central Heating Systems.

**Ideal Stelrad Group** recommend the use of Fernox Copal or MB1 or GE Betz Sentinel X100 inhibitors and associated water treatment products, which must be used in accordance with the manufacturers' instructions.

For further information contact:

**Fernox Manufacturing Co. Ltd**., Cookson Electronics, Forsyth Road, Sheerwater, Woking, Surrey, GU21 5RZ
Tel: +44 (0) 1799 521133

or

**G E Betz Ltd**., Sentinel Division, Foundry Lane, Widnes, Cheshire, WA8 8UD
Tel: +44 (0) 151 424 5351

**Notes.**

1. *It is most important that the correct concentration of the water treatment products is maintained in accordance with the manufacturers' instructions.*
2. *If the boiler is installed in an existing system any unsuitable additives MUST be removed by thorough cleansing.*
3. *In hard water areas, treatment to prevent limescale may be necessary - however the use of artificially softened water is NOT permitted.*
4. *Under no circumstances should the boiler be fired before the system has been thoroughly flushed.*

## ELECTRICAL SUPPLY

**WARNING. This appliance must be earthed.**

Wiring external to the appliance MUST be in accordance with the current I.E.E. (BS7671) Wiring Regulations and any local regulations which apply. For Ireland reference should be made to the current ETCI rules for electrical installations.

The point of connection to the mains should be readily accessible and adjacent to the boiler.

## CONDENSATE DRAIN

A condensate drain is provided on the boiler. This drain must be connected to a drainage point on site. All pipework and fittings in the condensate drainage system MUST be made of plastic - no other materials may be used.

**IMPORTANT.** Any external runs must be insulated to avoid freezing in cold weather causing blocking.

**HYDRAULIC RESISTANCE**

| Boiler | Pressure Drop (mbar) @ 20°C | Pressure Drop (mbar) @ 11°C |
|---|---|---|
| 280 | 105 | 347 |
| 240 | 100 | 330 |
| 200 | 95 | 314 |
| 160 | 90 | 297 |
| 120 | 85 | 281 |
| 80 | 80 | 264 |

## 1 BOILER DIMENSIONS AND CONNECTIONS

*All dimensions shown in mm*

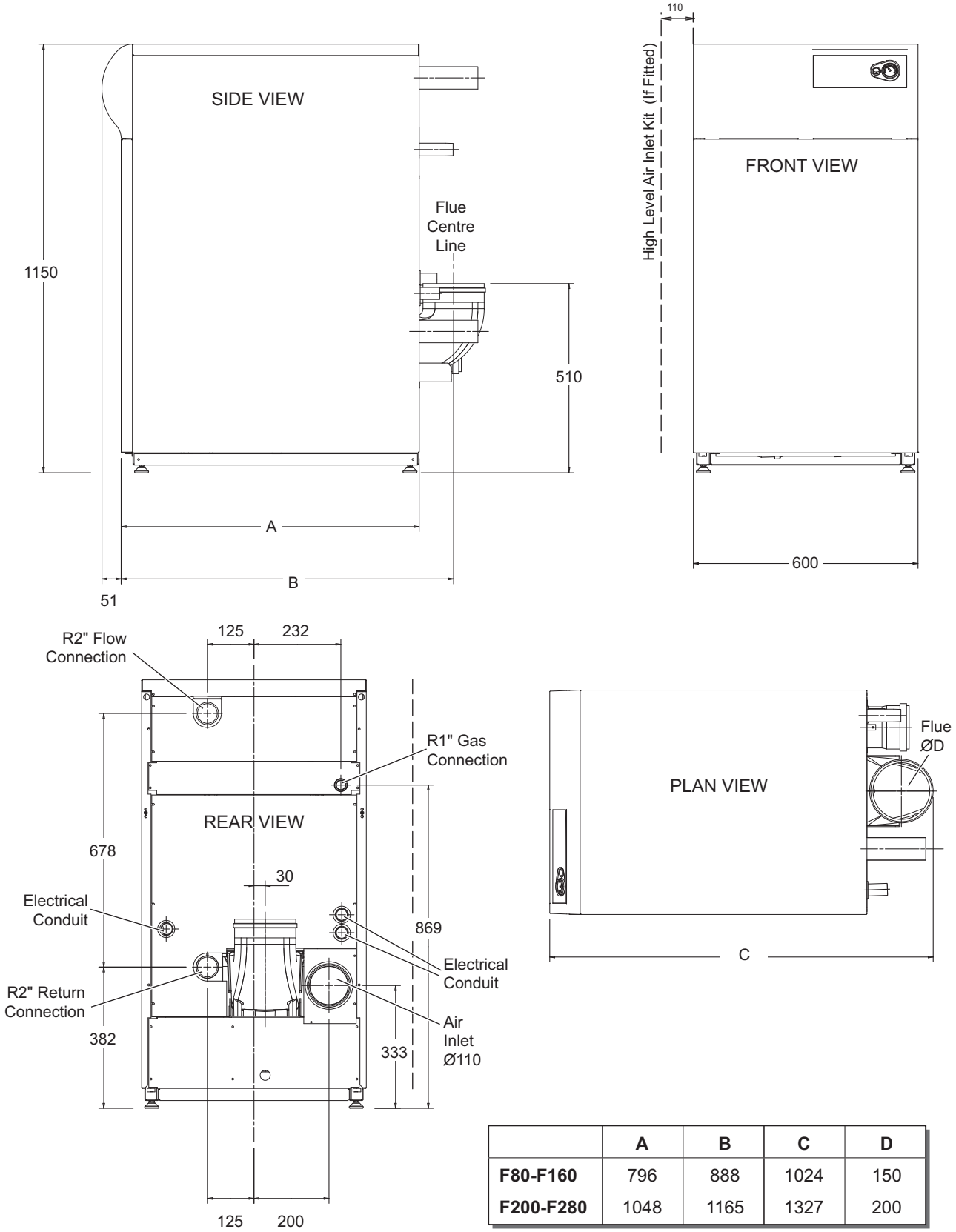


| | A | B | C | D |
|---|---|---|---|---|
| **F80-F160** | 796 | 888 | 1024 | 150 |
| **F200-F280** | 1048 | 1165 | 1327 | 200 |

im8252

## 2 BOILER CLEARANCES

The minimum dimensions as indicated must be respected to ensure good access around the boiler.

Recommended minimum clearances are as follows.

**Rear:**

700mm or adequate space from the rear of the jacket to make the flue connections and access to the flue sample point, drain connection, flue and any safety or control devices.

**Left Side:**

450mm

**Right Side:**

150mm

**Front:**

600mm; except, access doors may be closer, but not less than 200mm and 600mm must still be available for service across the width of the boiler.

**Top:**

500mm.

## 3 VENTILATION

The ventilation requirements of these boilers are dependant on the type of flue system used, and their heat input. All vents must be permanent with no means of closing, and positioned to avoid accidental obstructions by blocking or flooding.

Detail reference should be made to BS. 6644 for inputs between 70kW and 1.8MW (net). In IE refer to the current edition of I.S.820. The following notes are for general guidance only:

**Dust contamination in the combustion air may cause blockage of the burner slots. Unless the boiler room provides a dust free environment then direct connection of the air intake via ducting to clean outside air should be used.**

The temperature within a boiler room shall not exceed 25°C within 100 mm of the floor, 32°C at mid height and 40°C within 100 mm of the ceiling.

***IMPORTANT NOTE.***

**If combustion air is drawn from within the boiler room, ensure no dust or airborne debris can be ingested into the appliance. Dusty concrete flooring should be sealed to reduce the presence of dust. Ideally where possible duct the air supply into the boiler room from a clean source outside the boiler room/building.**

**Open Flued Installations**

If ventilation is to be provided by means of permanent high and low vents communicating direct with outside air, then reference can be made to the sizes below. For other ventilation options refer to BS. 6644. In IE refer to the current edition of I.S.820.

**Required area ($cm^2$) per kW of total rated input (net)**

| | Boiler Room | Enclosure |
|---|---|---|
| Low level (inlet) | 4 | 10 |
| High level (outlet) | 2 | 5 |

Note: Where a boiler installation is to operate in summer months (e.g. DHW) additional ventilation requirements are stated, if operating for more than 50% of time (refer to BS6644).

**Room Sealed Installations**

A minimum of $2cm^2$ free area per kW of net heat input at both high and low level is required for boiler rooms. For enclosures refer to BS6644.

## 4 OPEN VENTED SYSTEM REQUIREMENTS

Detail reference should be made to the appropriate standards listed on page 4.

The information and guidance given below is not intended to override any requirements of the above publications or the requirements of the local authority, gas or water undertakings.

The vertical distance between the pump and feed/expansion cistern MUST comply with the pump manufacturer's minimum requirements, to avoid cavitation. Should these conditions not apply either lower the pump position or raise the cistern above the minimum requirement specified by **Ideal Stelrad Group**. The isolation valves should be fitted as close to the pump as possible.

The information provided is based on the following assumptions:

1. An independent open vent/safety pipe connection is made immediately after the system flow pipe connection.
2. An independent cold feed/expansion pipe connection is made immediately after the open vent/safety pipe connection.
3. The maximum flow rate through the boiler is based on a temperature difference of 11°C at full boiler output.
4. The boiler is at the highest point of circulation in the system. Systems designed to rise above the boiler flow tappings will automatically require a minimum static head higher than that shown.
5. The position of the open vent/safety pipe above the expansion cistern water level is given as a guide only. The final position will depend upon the particular characteristics of the system. Pumping over of water into the expansion cistern must be avoided.
6. Both open vent/safety pipe and cold feed/expansion pipes must be of adequate diameter to suit the output of the boiler. Refer to Tables below.

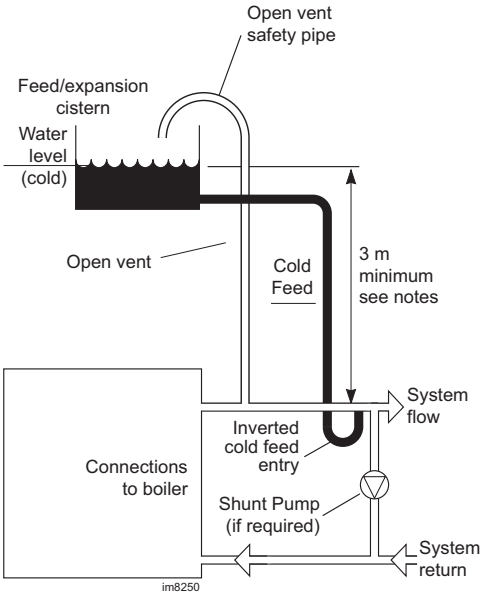


**Note.**

- *With a cold feed head of <8m, the pump must be fitted on the return to the boiler.*
- *This diagram does not show safety valves, water flow switches, etc. necessary for the safe operation of the system.*

**Open Vent Pipe Sizes**

| Rated output kW | Minimum bore mm | Nominal Size (DN) in |
|---|---|---|
| 61 to 150 | 32 | 1 1/4 |
| 151 to 300 | 38 | 1 1/2 |
| 'Steel pipe sizes complying with medium or heavy quality or BS 1387. | | |

**Cold Feed Pipe Sizes**

| Rated output kW | Minimum bore mm | Nominal Size (DN) in |
|---|---|---|
| 60 to 150 | 25 | 1 |
| 151 to 300 | 32 | 1 1/4 |
| 'Steel pipe sizes complying with medium or heavy quality or BS 1387. | | |

**Note.** *Refer to Frame 22 for typical system arrangements.*

## 5 SEALED SYSTEM REQUIREMENTS

**Working pressure 6 bar maximum.**

Particular reference should be made to BS. 6644 and Guidance note PM5 "Automatically controlled steam and hot water boilers" published by the Health and Safety Executive.

The information and guidance given below is not intended to override any requirements of either of the above publications or the requirements of the local authority, gas or water undertakings.

In general commercial closed pressurised systems are provided with either manual or automatic water make up.

In both instances it will be necessary to fit automatic controls intended to protect the boiler, circulating system and ancillary equipment by shutting down the boiler plant if a potentially hazardous situation should arise.

Examples of such situations are low water level and operating pressure or excessive pressure within the system. Depending on circumstances, controls will need to be either manual or automatic reset. In the event of a shutdown both visual and audible alarms may be necessary.

Expansion vessels used must comply with BS. 4814 and must be sized on the basis of the total system volume and initial charge pressure.

Initial minimum charge pressure should not be less than 0.5 bar (7.2psi) and must take account of the static head and specification of the pressurising equipment. The maximum water temperatures permissible at the point of minimum pressure in the system are specified in Guidance Note PM5.

When make up water is not provided automatically it will be necessary to fit controls which shut down the plant in the event of the maximum system pressure approaching to within 0.35bar (5psi) of the safety valve setting.

Other British Standards applicable to commercial sealed systems are:

BS. 6880: Part 2
BS. 1212
BS. 6281: Part 1
BS. 6282: Part 1
BS. 6283: Part 4

## 6 BOILER ASSEMBLY - Exploded View (F280 shown)

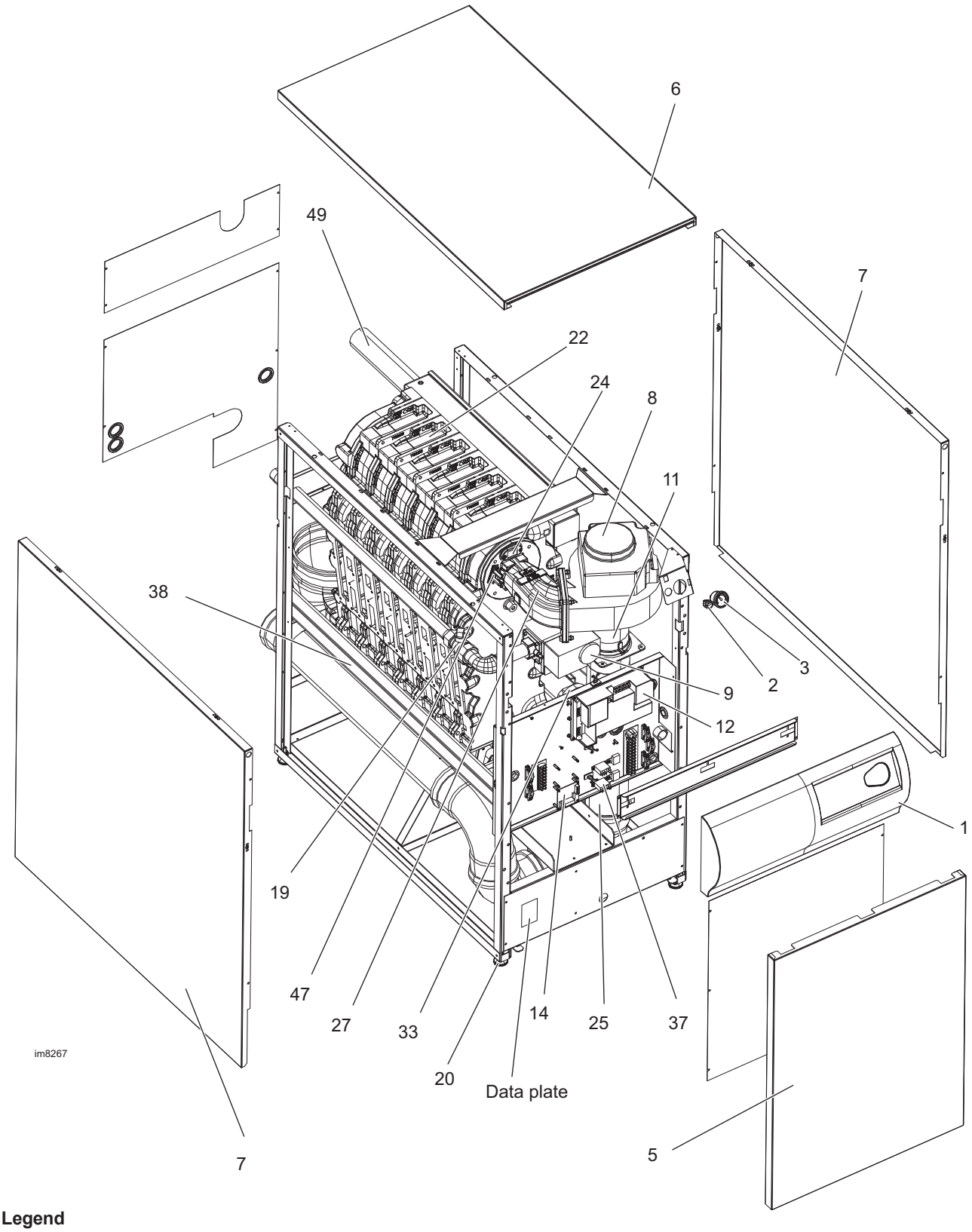


**Legend**

1. Control fascia panel
2. Burner switch
3. Pressure gauge
5. Casing front panel
6. Casing top panel
7. Casing side panel
8. Fan
9. Gas Valve
11. Venturi
12. Control Module
14. Alarm / boiler run relays board
19. Union Gas cock
20. Levelling feet
22. Heat exchanger
24. Sightglass
25. Air inlet
27. Burner manifold
33. Air pressure switch
37. Relay
38. Cable conduit
47. Ignition / detection electrode
49. Manifold - Flow

## 7 PACKAGING REMOVAL / REMOVAL FROM PALLET / LOCATING & LEVELLING

The boiler is delivered assembled and protected by a cardboard sleeve and fittings and fixed on a wooden base. This allows the boiler to be handled by a forklift.

The packaged boiler will pass through a 800mm wide opening and unpacked boiler through a 700mm wide opening.

**To unpack the boiler:**

- Carefully remove the straps, and lift off the cardboard sleeve.
- Remove the protective cardboard fittings.
- Safely dispose of all packing materials.

**To remove boiler from base:**

1. Remove the 3 front screws on both sides leaving the 2 rear screws in place.
2. Rotate bottom battens outwards allowing the front of the base to rest on the floor.
3. Remove 4 screws and retaining brackets.
4. Slide the boiler off the base.

At final location, adjust height of feet as necessary to level the boiler.

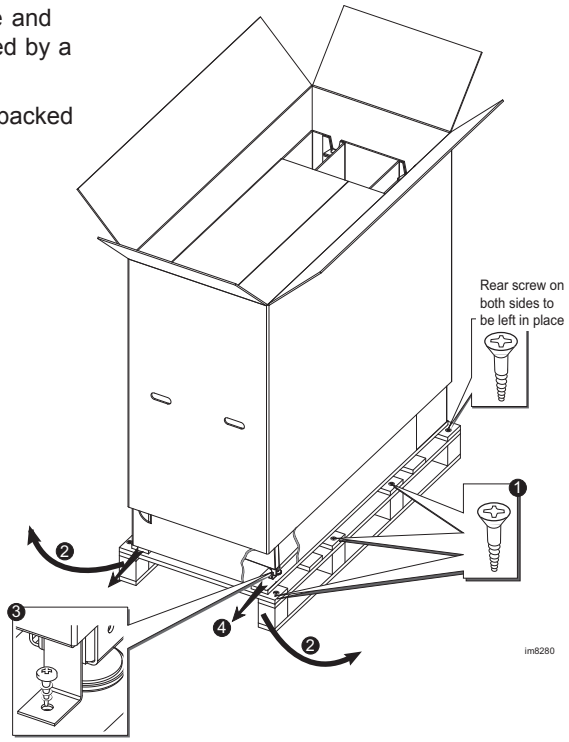


## 8 FLUE / AIR DUCT INSTALLATION

### FLUE

A flue sampling point should be provided in the flue system.

When fitting the flue to the flue socket take care not to disturb the lip seal which must be present.

The flue should be supported in such a way as not to place a load on the flue socket.

**IMPORTANT NOTE.**

***Unless the flue is manufactured from aluminium the condensate from the flue must be collected and drained before entering the sump of the boiler. See page 5 for details on flue system design.***

### AIR DUCT

Combustion air can be drawn directly from the boiler room using the high level air inlet kit provided or ducted in from outside (see ventilation page 8).

To draw air direct from outside use any proprietary 110mm soil/drain pipe. The air duct should be terminated with a suitable fixed grille to prevent entry of vermin. This terminal should be positioned as such to avoid blockages or entry of water.

Where ducting the air from outside is not practical it can be drawn from the boiler room by assembling the air inlet pipework as follows into the configuration,shown in fig. 1.

1. Fit the 93º elbow into the boiler air inlet pipe.
2. Fit the 112.5º bend into the 93º elbow.
3. Fit the 110 dia. tube, 590mm long, into the 112.5º bend.
4. Fit the air inlet grille to 100 dia. tube and fix the 3 off self-tapping screws provided.
5. Using the existing screws holding the upper back panel to the boiler, fit the support bracket assembly and re-tighten the screws.
6. With the air inlet pipe assembly in position, retain it with the pipe clamp, fixed with 2 off M5 screws provided.

With this kit fitted the maximum straight flue length available and maximum pressure available at the base of the flue to overcome flue resistance will change, refer to the appropriate table on page 5.

fig 1

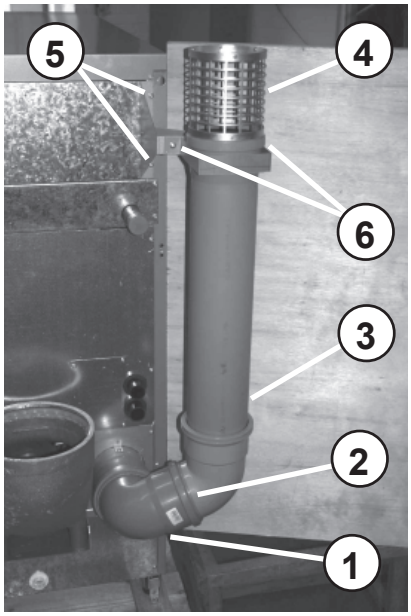

## 9 CONDENSATE DRAIN

The condensate drain must be connected to the condensate bulk head connector on the back of the boiler and then connected to a drainage point, preferably within the building.

The pipe size from the condensate connector on the lower rear panel is 21.5mm.

The routing of the drain must be made to allow a minimum fall of 1 in 20 away from the boiler, throughout its length.

**IMPORTANT.** Any external runs must be kept to a minimum and insulated. This is to avoid freezing in cold weather causing blocking.

All pipework and fittings in the condensate drain system must be made of plastic. No other materials may be used.

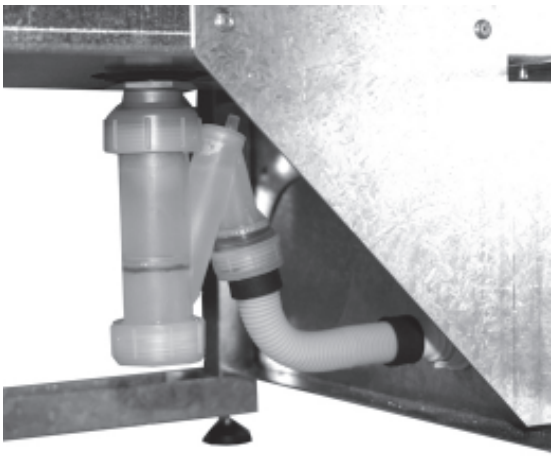

## 10 BOILER WATER CONNECTIONS

The boiler flow and return pipes are terminated with 2" BSP male taper threads at the rear of the appliance. Water returning from the system should be connected to the lower pipe, with the flow water connection coming from the top pipe.

Refer to Frame 1.

Plastic plugs fitted on the open ends of the flow and return pipes must be removed before connecting the system pipework.

An air vent must be provided immediately after the flow connection.

If installing the boiler onto an existing system it is strongly recommended that the system be thoroughly flushed before connecting the boiler. When connecting to a new system it is still important to flush the whole system in accordance with the relevant standards.

## 11 FROST PROTECTION

The boiler has built into its control system the facility to protect the boiler only against freezing.

If the boiler flow temperature $T_1$, falls below 7°C the pump will be activated without the boiler firing.

If the flow temperature falls below 3°C the boiler will fire at minimum rate until the flow temperature exceeds 20°C and the return temperature exceeds 5°C. The pump will stay running for a further 15 minutes.

Central heating systems fitted wholly inside the building do not normally require frost protections as the building acts as a 'storage heater' and can normally be left at least 24 hours without frost damage. However, if parts of the pipework run outside the building or if the boiler will be left off for more than a day or so, then a frost thermostat should be wired into the system, see Frame 19.

## 12 GAS CONNECTIONS

The boiler gas supply pipe is terminated in a 1" BSP male taper connection on the left-hand side of the appliance.

A minimum working gas pressure of 15mbar (6" w.g.) must be available at the boiler inlet with the boiler firing.

Fit a gas supply pipe NOT LESS THAN 1"BSP to the boiler.

## 13 ELECTRICAL CONNECTIONS

**Warning**. This appliance MUST be efficiently earthed.

A mains supply of 230V 50Hz is required. External controls should NOT be wired in series with this mains input. Controlling the mains input in this way will prevent the pump over-run sequence and may cause damage to the boiler. The supply wiring MUST be suitable for mains voltage. Wiring should be 3 core PVC insulated cable NOT LESS than 0.75mm$^2$ (24 x 0.2 mm) and to BS. 6500, Table 16. The fuse rating should be 5A for F80-F120 and 7A for F160-F280.

Wiring external to the boiler MUST be in accordance with the current I.E.E. (BS7671) wiring Regulations and any local regulations. For Ireland reference should be made to the current ETCI rules for electrical installations.

Connection should be made in a way that allows complete isolation of the electrical supply - such as a double pole switch, having a 3mm (1/8") contact separation in both poles, or a plug and unswitched socket serving only the boiler and system controls. The means of isolation must be accessible to the user after installation.

When making mains electrical connections to the boiler it is important that the wires are prepared in such a way that the earth conductor is longer than the current carrying conductors, such that if the cord anchorage should slip the current carrying conductors become taut before the earthing conductor.

**Warning.** Sensor cables must be separated from cables in the 230V circuit. For this purpose three conduits are provided. Refer to Frame 15 for terminal strip connections.

## 14 INSTALLING THE MAINS AND CONTROL WIRING

1. Route the mains supply in at the rear, through the right hand conduit.
2. Route any remote sensor cables similarly through the left hand lower conduit.
3. Route mains outputs from optional modulating sequencer through the left hand upper conduit.
4. Secure the cables with the cable clamps provided in the controls box.

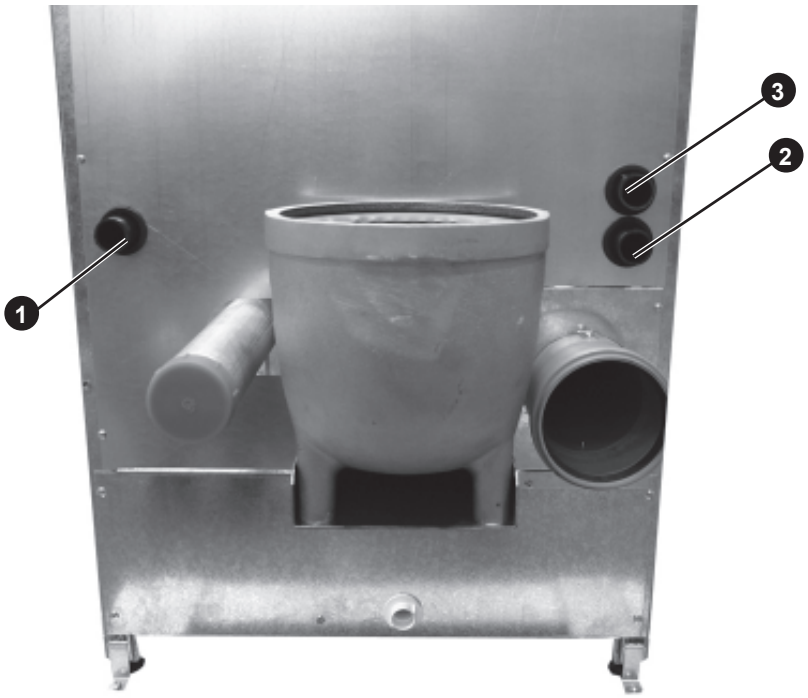

## 15 INSTALLER CONNECTIONS

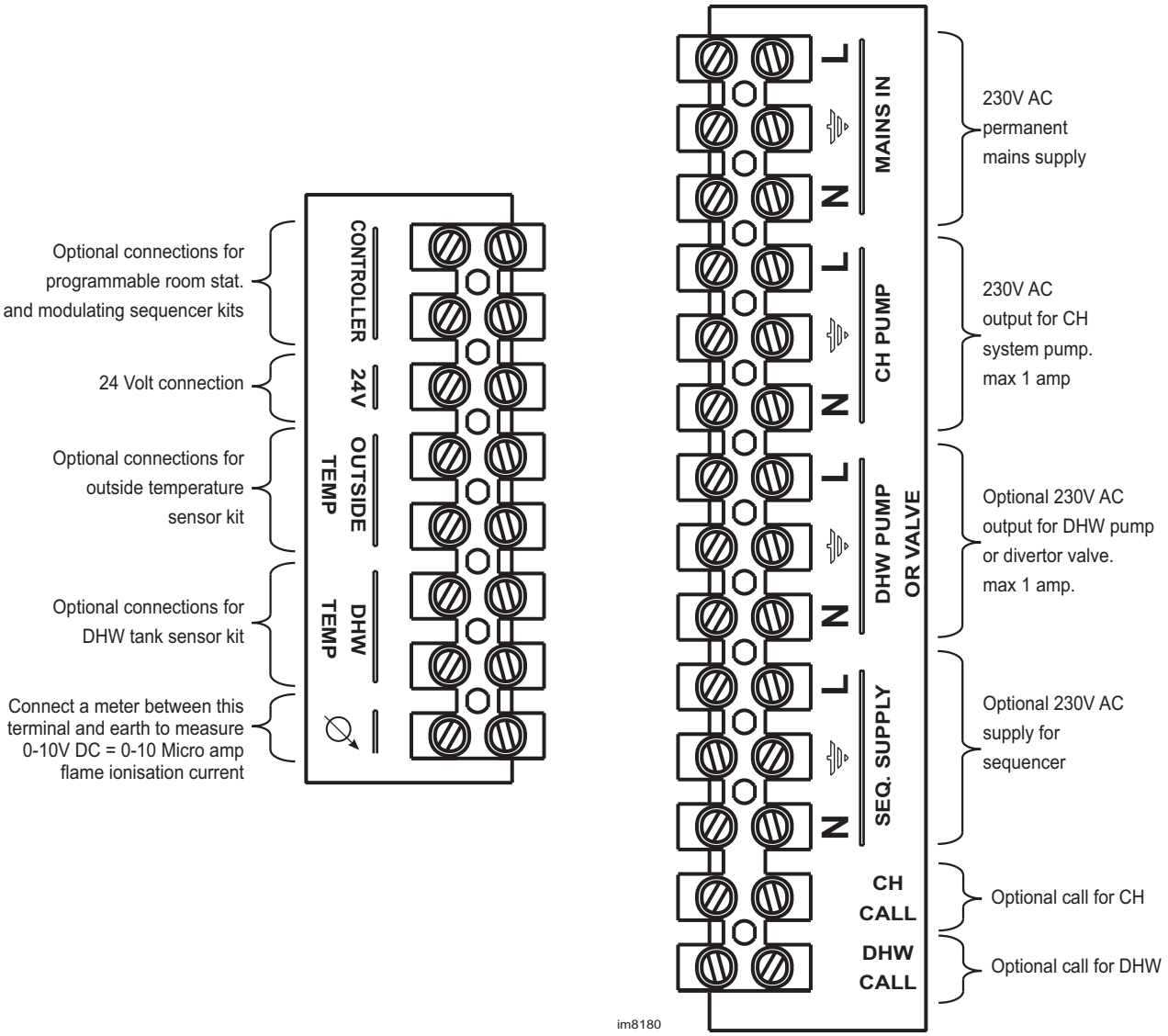


### Volt Free Contact

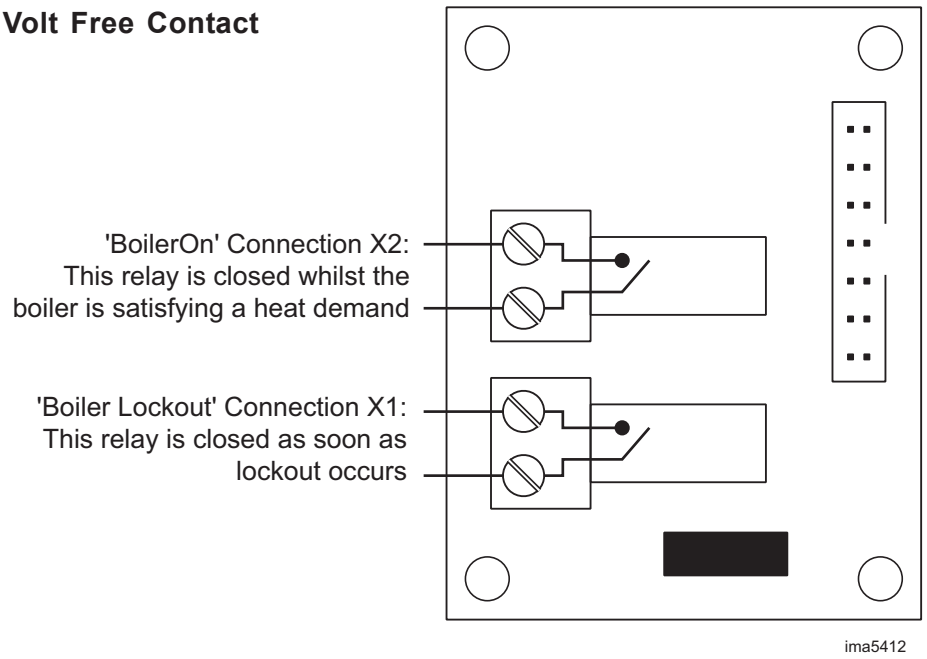

## 16 CH CONTROL CONNECTIONS

Input terminals are available for connecting a variety of system controls for central heating demand.

Heating demand can be controlled by:

1. **ON/OFF using a 230V switched live to 'CH call' terminal. (e.g. programmer and/or room thermostat).**

   A call for heat will cause the boiler to run and maintain a set flow temperature controlled by parameter 4 or with the addition of the Outside Sensor Kit fitted (automatically detected) the boiler will run at a weather compensated flow temperature (see instructions with kit for more details).

2. **Outside Sensor Kit.**

   Like in option 1 above the Outside Sensor Kit can be fitted to the boiler generating a weather compensated flow temperature. Unlike option 1 this configuration reacts differently to the application of a 230V switched live to 'CH call' terminal. When no signal is applied to 'CH call' the boiler is not switched off but simply reduces the flow temperature by a fixed value (parameter 20) (see instructions with kit for more details).

3. **Programmable Room Thermostat Kit.**

   The programmable room thermostat kit incorporates a room temperature sensor and a programmer capable of controlling the heat output from the boiler to satisfy different temperature requirements at different time periods. Optimised starts are possible and the addition of an Outside Sensor Kit will enable a weather compensated flow temperature.

4. **Modulating Sequencer Kit.**

   A Modulating Sequencer Kit is capable of controlling the heat demand on up to 5 boilers simultaneously. (See instructions with kit for more details.)

5. **0-10V BMS Kit**

   Applying an analogue 0-10V supply to the boiler via this optional kit can control either the set flow temperature or the heating capacity. (See instructions with kit for mode details).

Output terminals are provided for a circulating pump which must be connected to allow the pump overrun function to operate. A pump requiring more than 1 amp supply current must be connected via a relay.

## 17 DHW CONTROLS CONNECTIONS

If the boiler is providing both CH and DHW, and the CH circuit is to operate for periods at a reduced temperature (i.e. weather compensated), then it is necessary to differentiate between CH and DHW heat demands. For this purpose a DHW demand can be placed on the boiler using the 2 methods shown below.

A demand for DHW has priority over CH for a period controlled by parameter 43.

A call for DHW will cause the boiler to run and maintain a set flow temperature controlled by parameters 1 and 21.

Input terminals are available for connecting a DHW heat demand by:

1. **ON/OFF using a 230V switched to live 'DHW call' terminal (e.g. a cylinder thermostat and programmer).**

   A call for heat will cause the boiler to run and maintain a set flow temperature controlled by parameter 1 + parameter 21.

2. **ON/OFF using a Tank Sensor Kit.**

   Connection of this sensor cannot be in conjunction with a standard programmer. Installation of our Programmable Room Thermostat Kit provides the facility to shut off DHW supply during chosen night-time periods. The Tank Sensor Kit provides actual DHW temperatures to the boiler allowing closer load matching when satisfying DHW demands. (See instructions with kit for more details).

Output terminals are provided for a DHW pump or valve. This output can be used to control the diversion of flow to the DHW circuit. The type of pump or valve employed can be controlled by parameter 46. A pump or valve requiring more than 1 amp supply current must be connected via a relay.

## 18 PICTORIAL WIRING DIAGRAM

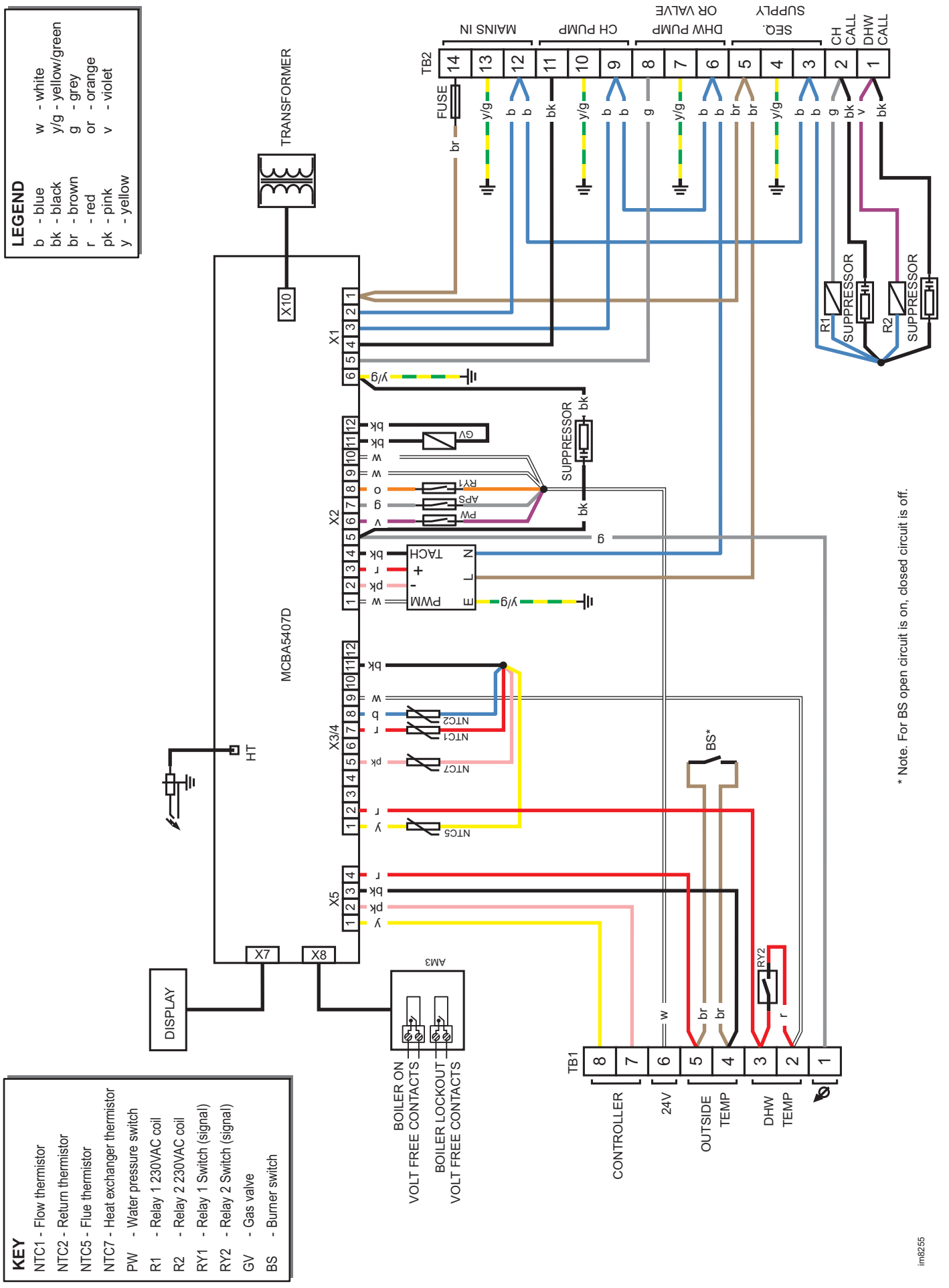

## 19 INDEPENDENT SYSTEM CONTROLS

If the system controls are to be independent of the boiler, then the following method should be used for connecting the boiler.

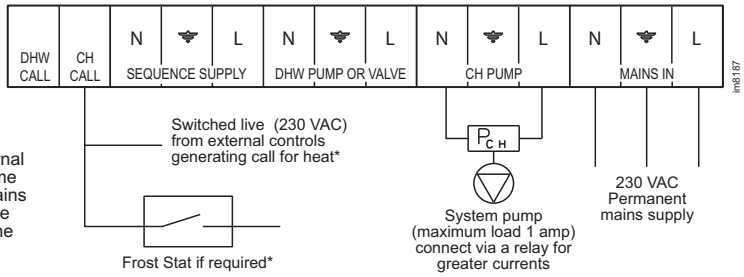


* The switched live from external controls must be from the same phase supply as the boiler mains supply to ensure that when the boiler supply is switched off the controls are also isolated.

**No parameter modifications are required.**

## 20 MAINS VOLTAGE CH AND DHW CONTROLS WITH DHW PUMP OUTPUT

This system provides heating to one zone at a time with DHW priority controlled by parameter 43. To heat more than one zone simultaneously, use zone thermostats to energise individual zone valves with all calls for heat applied to 'CH CALL'. The boiler will be limited to responding with a set flow temperature set by parameter 4.

If all zones are fitted with individual zone valves a hydraulic bypass will be required to allow pump overrun. See page 5 and 6 for details.

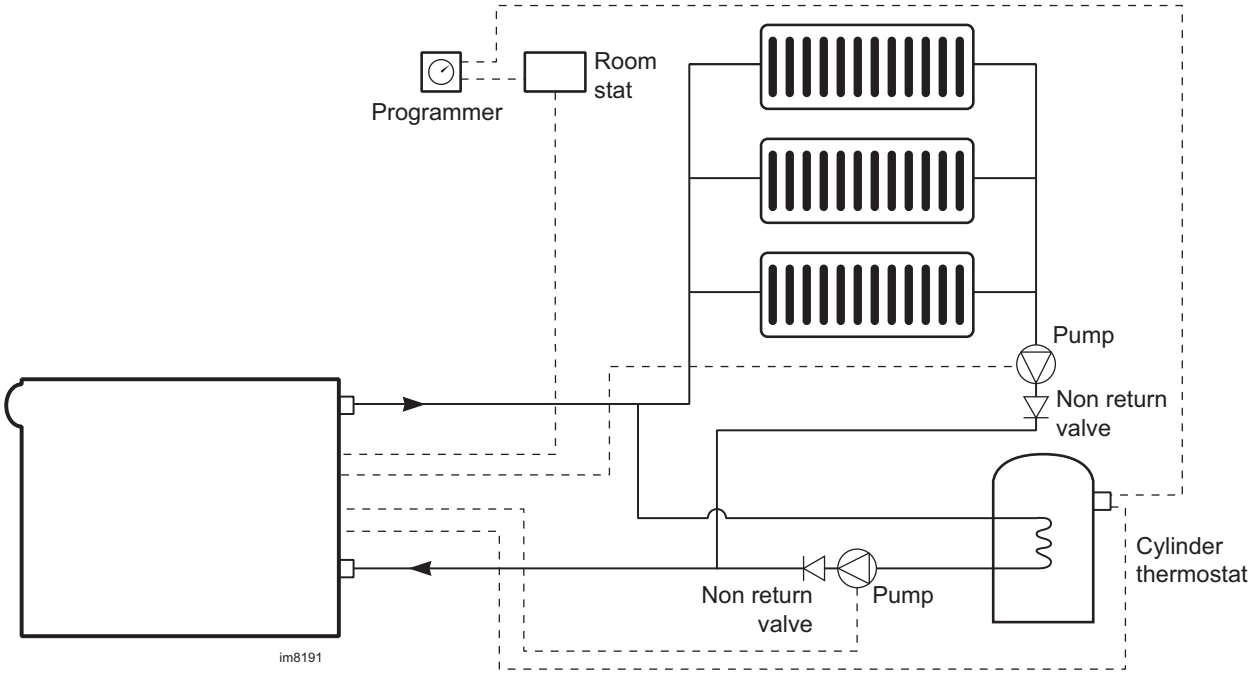


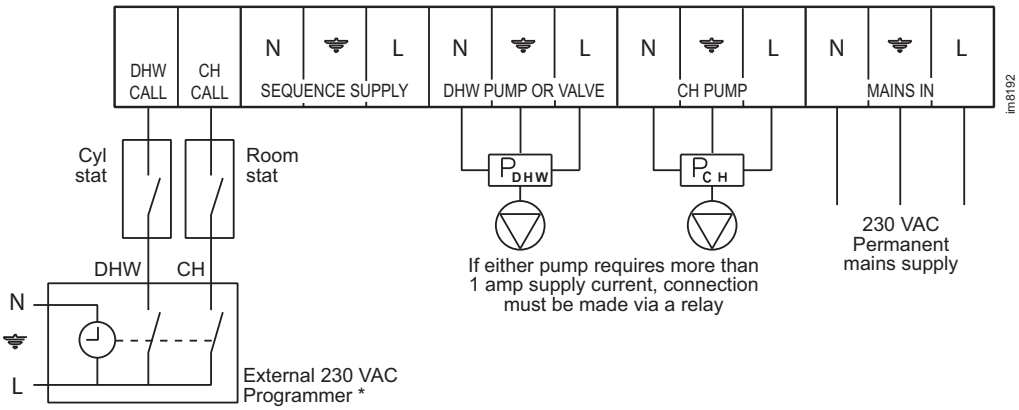


**No parameter modifications are required.**

**Alternatives**: The Ideal programmable room thermostat, outside sensor and tank sensor kit provides enhanced user comfort. Full instructions provided with kits.

* The switched live from external controls must be from the same phase supply as the boiler mains supply to ensure that when the boiler supply is switched off the controls are also isolated.

## 21 MAINS VOLTAGE CH AND DHW CONTROLS WITH DHW VALVE OUTPUT

This system provides heating to one zone at a time with DHW priority controlled by parameter 43. To heat more than one zone simultaneously, use zone thermostats to energise individual zone valves with all calls for heat applied to 'CH CALL'. The boiler will be limited to responding with a set flow temperature set by parameter 4.

If all zones are fitted with individual zone valves a hydraulic bypass will be required to allow pump overrun. See page 5 and 6 for details.

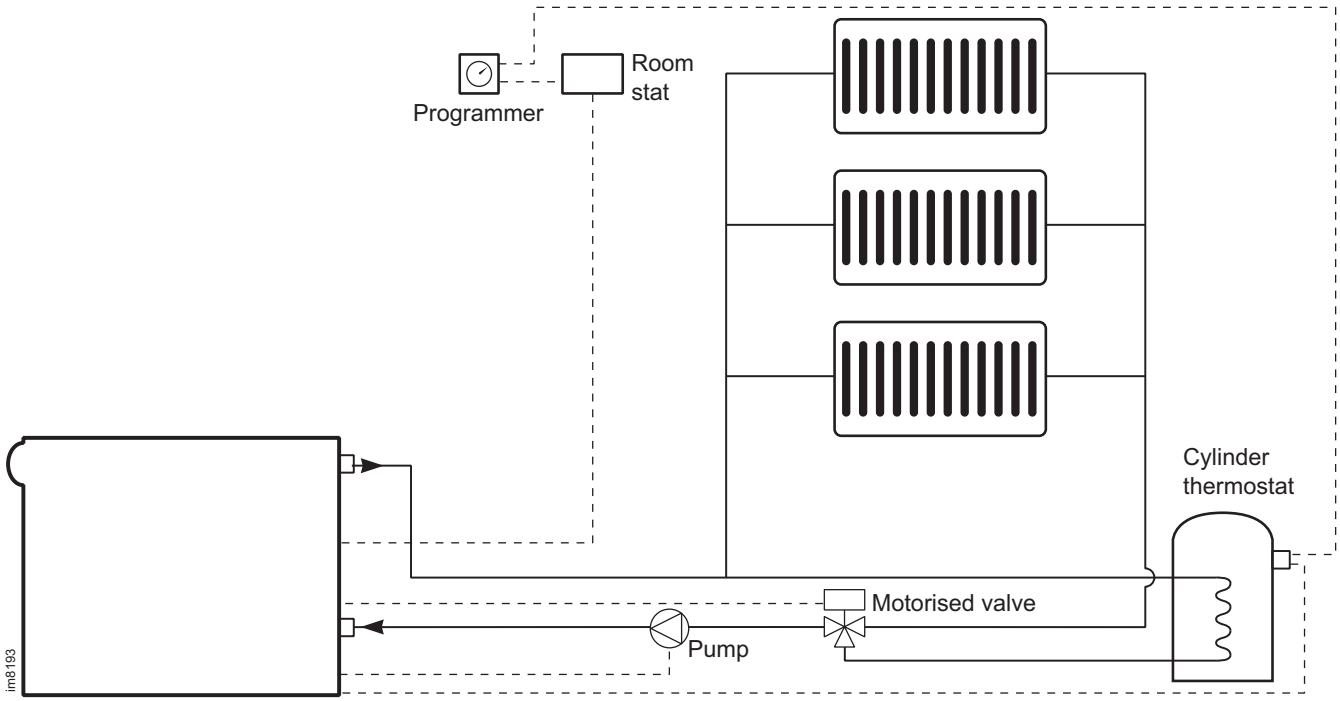


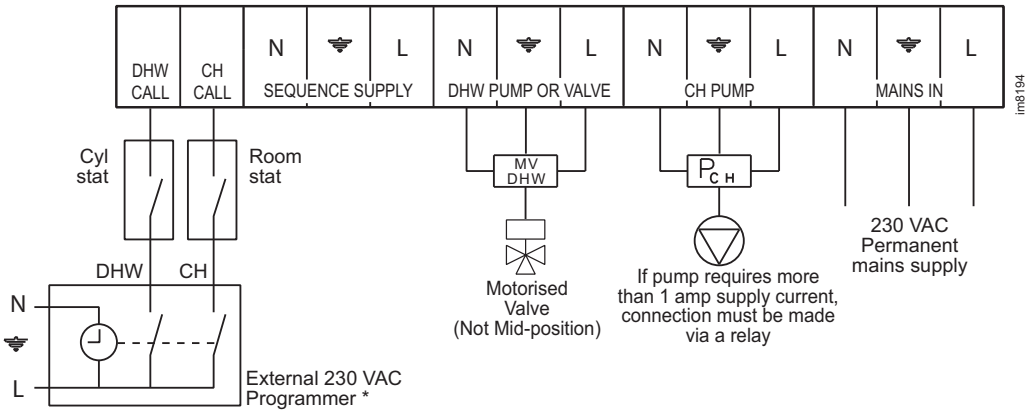


* The switched live from external controls must be from the same phase supply as the boiler mains supply to ensure that when the boiler supply is switched off the controls are also isolated.

Parameter modifications see Frames 28 to 32.

Parameter 46 = 03 If a live output is required for positioning of the valve to satisfy CH demand.

Parameter 46 = 23 If a live output is required for positioning of the valve to satisfy DHW demand.

**Alternatives**: The Ideal programmable room thermostat, outside sensor and tank sensor kit provides enhanced user comfort. Full instructions provided with kits.

## 22 EXAMPLES OF HEATING SYSTEMS

**Heating system with DHW production (storage tank Output = Boiler Output) and mixing header.**

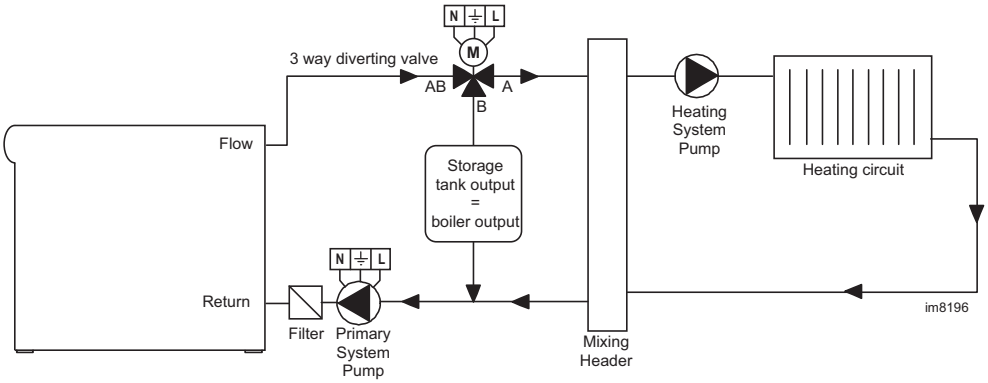


**Note.**

*If PARA '46' 1st digit is set to 2, it means you wish to have a 3 way valve normally open towards the CH circuit (radiator circuits from AB to A). Upon DHW request, terminal 'L' on 'DHW PUMP OR VALVE' is energised which, through a relay, powers the 3-way valve, thus closing port A and opening port B. Simultaneously terminal 'L' on 'CH PUMP' is energised which, through another relay, powers the primary system pump.*

*If PARA '46' 1st digit is set to 0, it means you wish to have a 3 way valve normally open towards the storage tank (DHW circuit from AB to B). Upon CH request, terminal 'L' on 'DHW PUMP OR VALVE' is energised which, through a relay, powers the 3-way valve, thus closing port B and opening port A. Simultaneously terminal 'L' on 'CH PUMP' is energised which, through another relay, powers the primary system pump.*

**Heating system with one group of radiators (controlled by thermostatic valves)**

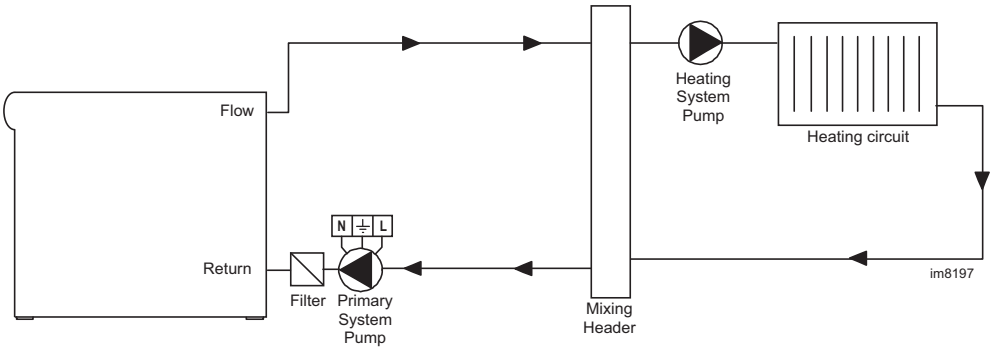


**DHW storage tank with DHW pump installed on the secondary circuit, in parallel with the heating circuit**

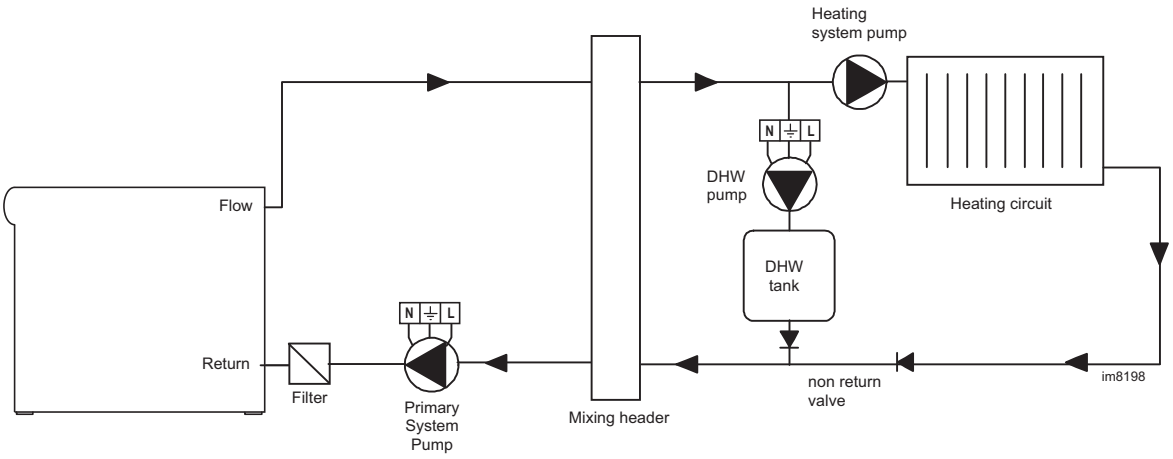


**Note.**

*The primary system pump would be off while the DHW pump is running with PARA '46' 1st digit set to '1x'. This would only give adequate circulation if the DHW pump was connected into the primary circuit, shown to the left of the mixing header above. However, in the case shown it will be necessary to run the primary system pump with the DHW pump for correct circulation. To achieve this set PARA '46' 1st digit '2x'.*

## 23 BASIC CONTROLS DISPLAY

**A.** Burner switch

**B.** Pressure gauge

**C.** Display

**D.** Reset button

**E.** Mode button

**F.** Step button

**G** Store button

**H.** + button (to increase values)

**I.** - button (to decrease values)

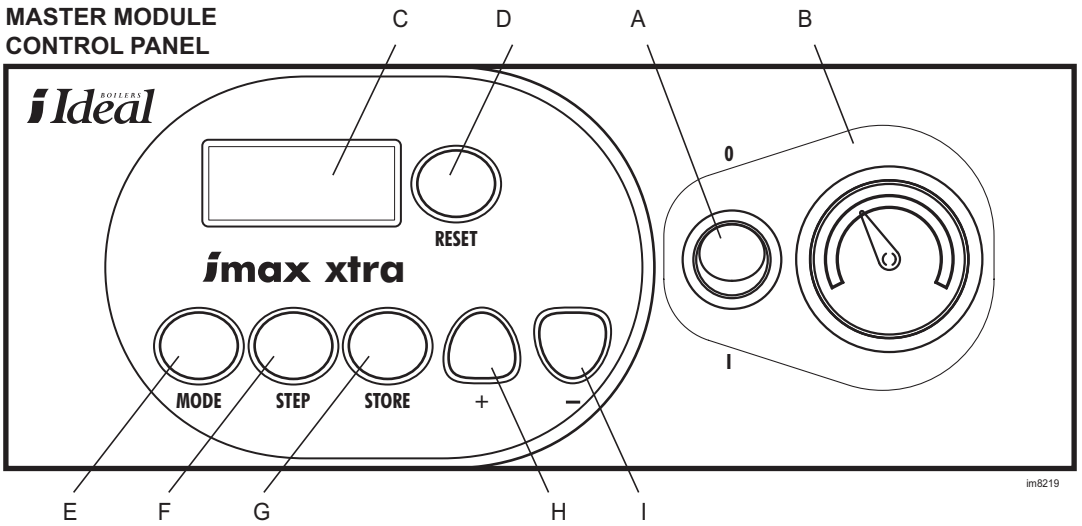


| Sequence | Boiler Status |
|---|---|
| A | DHW valve energised |
| 0 | Standby, no heat request |
| 1 | Pre-purge, post purge |
| 2 | Ignition |
| 3 | Burner on in CH mode |
| 4 | Burner on in DHW mode |
| 5 | Waiting for air pressure switch to open or close |
| 6 | Burner off because a set value has been reached |
| 7 | Pump overrun in CH mode |
| 8 | Pump overrun in DHW mode |

During the operation of the **imax xtra**, the status of the appliance can be determined by the display.

1. **Normal Operation Mode**

   The unit will either be in standby or in operation. The first digit on the display shows the boiler status (see table). The last 3 digits show the flow temperature.

2. **Blocking Mode**

   The boiler will enter blocking mode under certain fault conditions. Whilst in blocking mode the burner is switched off. Once the fault conditions are clear the boiler will automatically reset itself. In blocking mode the display will alternate between showing a '9' in digit one, along with the flow temperature in digits 2, 3 and 4.

e.g. 9 9 6

Followed by the blocking code 'bxx'. Refer to page 44 for Blocking Code references.

b 1 8

3. **Error Mode**

   In error mode the display will show the error code.

E 3 6

Refer to page 42 for error codes.

The boiler will enter error mode under certain fault conditions. The unit will be inoperative until the fault is rectified. The reset button is used to reset the boiler control module after an error has occurred.

**Self Check and Anti-seize Modes**

After switching on the mains power or after a reset, the boiler performs a selfcheck, i.e. the DHW valve is energised and the CH pump is switched on for 10 seconds. This cycle repeats itself every 24hrs, as long as no heat request is given in 24hrs.

**Burner on/off switch**

With the burner switch set to 'off' the boiler will not respond to a CH demand. However, it will respond to a DHW demand and the pump anti-seize and frost protection modes are still operational any one of which could cause the boiler to fire. Note. The burner switch is NOT a mains isolation switch.

**CH/DHW Systems**

In standby mode pressing and holding the '+' button for 3 seconds turns the CH system on/off.

In standby mode pressing and holding the '-' button for 3 seconds turns the DHW system on/off.

## 24 STANDARD CONTROLS ACCESS

**Modes of Operation**

The standby, parameter and information modes are accessible without the service code.

**Standby Mode**

Stby

The standby mode will be shown after start up or reset of the boiler control module. If no buttons are pressed for 20 minutes the display will automatically be set to standby mode. If new parameters have been stored they will then become active.

**Parameter Mode**

PARA

In parameter mode it is possible to change the settings of the boiler control module. The following settings can be changed.

| | |
|---|---|
| 1. | DHW Temperature (T3) |
| 2. | DHW System ON/OFF |
| 3. | CH System ON/OFF |
| 4. | Flow Temperature (T1) |

Parameter settings and limits are listed below.

Parameter mode is entered from standby mode by pressing the 'mode' button once.

| Press | Display |
|---|---|
| MODE | PARA |

Press the 'step' button until the desired parameter is displayed.

The dot after the 1st digit is illuminated to indicate that the boiler is in 'PARA' mode.

| Press | Display | Description | | Lower Limit | Upper Limit | Factory Setting |
|---|---|---|---|---|---|---|
| STEP | 1. 60 | **DHW Temperature (°C) (T3)**<br>Instant water heater<br>Storage Tank | | <br>40<br>20 | <br>85<br>70 | <br><br>60 |
| STEP | 2. 01 | **DHW System** | 00 = Off<br>01 = On<br>02 = Off + pump continuous<br>03 = On + pump continuous | | | 01 |
| STEP | 3. 01 | **CH System** | 00 = Off<br>01 = On<br>02 = Off + pump continuous<br>03 = On + pump continuous | | | 01 |
| STEP | 4. 82 | **CH Flow Temperature (°C) (T1)** | | 20 | 90 | 82 |

Press the '+' or '-' buttons to change the values.

The parameter setting can be stored by pressing and releasing the 'store' button, the new setting flashes twice to show it has been accepted. The new setting will become active when the parameter mode is left.

*continued.....*

## 25 STANDARD CONTROLS ACCESS CONT'D

**Info Mode**

INFO

Info mode is entered from standby mode by pressing the 'mode' button twice.

| Press | Display |
|---|---|
| MODE | PARA |
| MODE | INFO |

Press the step button until the desired information is displayed. The dot after the 1st digit will be flashing indicating the boiler is in 'info' mode. No settings can be changed in 'info' mode.

| Press | Display | Description |
|---|---|---|
| STEP | Flashing 1. 21 | **Actual Flow Temperature T1 (°C)** |
| STEP | 2. 21 | **Actual Return Temperature T2 (°C)** |
| STEP | 3. -36 | **DHW Temperature T3 (°C)**<br>(-36 displayed if tank sensor kit not fitted) |
| STEP | 4. -36 | **OUTSIDE Temperature T4 (°C)**<br>(-36 displayed if outside sensor kit not fitted) |
| STEP | 5. 70 | **FLUE GAS Temperature T5 (°C)** |
| STEP | 6. 82 | **Set Flow Temperature (°C)** |
| STEP | 7. 0.0 | **Rate of Flow Temperature Rise (°C/s)** |
| STEP | 8. 0.0 | **Rate of Return Temperature Rise (°C/s)** |
| STEP | 9. 0.0 | **Rate of DHW Temperature Rise (°C/s)** |
| STEP | A. -36 | **N/A** |

*continued.....*

## 26 STANDARD CONTROLS ACCESS CONT'D

Info mode cont'd.....

| Press | Display | Description |
|---|---|---|
| STEP | b. 0.0 | N/A |
| STEP | C. 82 | Heat Exchanger Temperature T7 (°C) |
| STEP | d. 0.1 | Rate of increase in Temperature T7 (°C/s) |
| STEP | E. 0.1 | Ionisation Current or (micro amps) |
| STEP | F. 0.0 | N/A |
| STEP | G. 0.0 | N/A |
| STEP | H. 35 | Boiler Control Module Internal Temperature (°C) |
| STEP | I. 00 | Number of Ignitions, CH<br>100 thousands/10 thousands |
| STEP | ı . 00 | Number of Ignitions, CH<br>thousands/hundreds |
| STEP | ı. 00 | Number of Ignitions, CH<br>tens/units |
| STEP | J. 00 | Burner Run Hours, CH<br>100 thousands/10 thousands |
| STEP | ı . 00 | Burner Run Hours, CH<br>thousands/hundreds |
| STEP | ı. 00 | Burner Run Hours, CH<br>tens/units |
| STEP | L. 00 | Number of Ignitions, DHW<br>100 thousands/10 thousands |
| STEP | ı . 00 | Number of Ignitions, DHW<br>thousands/hundreds |
| STEP | ı. 00 | Number of Ignitions, DHW<br>tens/units |

*continued.....*

## 27 STANDARD CONTROLS ACCESS CONT'D

Info mode cont'd.....

| Press | Display | Description |
|---|---|---|
| STEP | N. 00 | Burner Run Hours, DHW<br>100 thousands/10 thousands |
| STEP | . 00 | Burner Run Hours, DHW<br>thousands/hundreds |
| STEP | . 00 | Burner Run Hours, DHW<br>tens/units |

**Service Mode**

L 60 or H 80

It is possible for servicing purposes to run the boiler on maximum or minimum loads.
This mode is entered from normal operating mode.

| Press | Display | Description |
|---|---|---|
| | XXXX | As found |
| MODE several times | Stby | Standby display |
| Wait a few seconds | 0 28 | Normal Display |

Press the 'mode' and '-' button simultaneously for 3 seconds.

| Press | Display | Description |
|---|---|---|
| MODE – | L 60* | 'Min. Load'. Run for 15 mins |

OR

Press the 'mode' and '+' button simultaneously for 3 seconds.

| Press | Display | Description |
|---|---|---|
| MODE + | H 80* | 'Max. Load'. Run for 15 mins |

*Last 3 digits are actual flow temperature

This mode will end automatically after 15 minutes. Alternatively to escape sooner press the '+' and '-' simultaneously.

In order to set the boiler to a fixed fan speed proceed to CODE MODE (Page 25) and select 'PARA' mode 47 (Page 26).

## 28 ADVANCED CONTROLS ACCESS

There is little requirement for advanced controls access as factory preset values are satisfactory for most parameters. If parameter changes are required with the optional kits then further instructions are provided with them.

This mode must only be entered by a competent engineer. This level of access MUST NOT be entered by the user.

**Code Mode**

CODE

By entering the service code the following additional features are accessible:

- Parameters 5 to 53
- Fan Speed Mode
- Communication Mode
- Error Mode

Code Mode is entered from 'standby' mode by pressing and holding the 'mode' and 'step' buttons. When the display shows 'CODE' release the buttons.

| Press | Display |
|---|---|
| MODE STEP | CODE |

Press the 'step' button once and the display will show 'C' as the first digit and a random number in the 3rd and 4th digits.

| Press | Display |
|---|---|
| STEP | C XX |

Use the '+' or '-' button to change the Code to 54.

| Press | Display |
|---|---|
| + or – | C 54 |

Press and release the 'store' button, the display flashes to show the code has been accepted.

| Press | Display |
|---|---|
| STORE | FLASHING C 54 |

Press the 'mode' button until the mode you want is displayed.

*continued.....*

## 29 ADVANCED CONTROLS ACCESS CONT'D

| | Press | Display | Description | Lower Limit | Upper Limit | Factory Setting |
|---|---|---|---|---|---|---|
| | MODE | PARA | | | | |
| 1 | STEP | 1. 60 | **DHW Temperature (°C) T3**<br>Instant water heater<br>Storage tank | <br>40<br>20 | <br>85<br>70 | <br><br>60 |
| 2 | STEP | 2. 01 | **DHW System** 00 = Off<br>01 = On<br>02 = Off + pump continuous<br>03 = On + pump continuous | | | 01 |
| 3 | STEP | 3. 01 | **CH System** 00 = Off<br>01 = On<br>02 = Off + pump continuous<br>03 = On + pump continuous | | | 01 |
| 4 | STEP | 4. 82 | **CH flow temperature (°C) T1 (max.)** | 20 | 90 | 82 |
| Steps 5 to 9 are not accessible. | | | | | | |
| 10 | STEP | P10 appears for 1 second then<br>. 20 | **CH flow temperature (min) (°C)**<br>Lowest set flow temperature on the warmest day (papa 12) | 15 | 60 | 25 |
| 11 | STEP | P11<br>. -05 | **Minimum outside temperature (°C)**<br>Coldest outside temp. the system is designed to work against | -20 | 10 | -05 |
| 12 | STEP | P12<br>. 20 | **Maximum outside temperature (°C)**<br>Warmest outside temp. the system is designed to work against | 15 | 25 | 20 |
| 13 | STEP | P13<br>. -02 | **Outside temperature (°C)**<br>(at which frost protection starts) | -30 | 10 | -02 |
| 14 | STEP | P14<br>. 00 | **Outside temperature correction (°C)**<br>(for boiler reading of outside temperature) | -05 | 05 | 00 |
| 15 | STEP | P15<br>. 80 | **N/A** | 20 | 45 | 40 |
| 16 | STEP | P16<br>. 25 | **N/A** | 10 | 40 | 20 |
| 17 | STEP | P17<br>. 10 | **N/A** | 01 | 30 | 03 |
| 18 | STEP | P18<br>. 25 | **Blocking CH flow temperature (°C)**<br>Boiler will not fire if the CH flow temperature set point is less than this note 00 = Off | 01 | 60 | 25 |

*continued.....*

## 30 ADVANCED CONTROLS ACCESS CONT'D

| | Press | Display | Description | Lower Limit | Upper Limit | Factory Setting |
|---|---|---|---|---|---|---|
| 19 | STEP | P19 . 00 | **Booster time (minutes)**<br>note 00 = Off | 00 | 30 | 00 |
| 20 | STEP | P20 . 10 | **CH flow parallel shift**<br>For use with outside temperature sensor | 00 | 80 | 10 |
| 21 | STEP | P21 . 20 | **Tplus (°C)**<br>Temperature added to DHW temperature set point (parameter 1) when storage tank used. | 00 | 30 | 20 |
| 22 | STEP | P22 . 48 | **Maximum fan speed CH** (hundreds)<br>F80<br>F120<br>F160<br>F200<br>F240<br>F280 | Do not adjust | Do not adjust | 48<br>52<br>51<br>50<br>53<br>53 |
| 23 | STEP | P23 . 00 | **Maximum fan speed CH** (units)<br>F80<br>F120<br>F160<br>F200<br>F240<br>F280 | Do not adjust | Do not adjust | 00<br>50<br>00<br>00<br>00<br>00 |
| 24 | STEP | P24 . 48 | **Maximum fan speed DHW** (hundreds)<br>F80<br>F120<br>F160<br>F200<br>F240<br>F280 | Do not adjust | Do not adjust | 48<br>52<br>51<br>50<br>53<br>53 |
| 25 | STEP | P25 . 00 | **Maximum fan speed DHW** (units)<br>F80<br>F120<br>F160<br>F200<br>F240<br>F280 | Do not adjust | Do not adjust | 00<br>50<br>00<br>00<br>00<br>00 |
| 26 | STEP | P26 . 12 | **Minimum fan speed** (hundreds)<br>F80<br>F120<br>F160<br>F200<br>F240<br>F280 | Do not adjust | Do not adjust | 16<br>13<br>12<br>13<br>13<br>12 |
| 27 | STEP | P27 . 16 | **Minimum fan speed** (units)<br>F80<br>F120<br>F160<br>F200<br>F240<br>F280 | Do not adjust | Do not adjust | 00<br>50<br>50<br>50<br>50<br>50 |
| 28 | STEP | P28 . 35 | **Ignition fan speed** (hundreds)<br>F80<br>F120<br>F160<br>F200<br>F240<br>F280 | Do not adjust | Do not adjust | 35<br>35<br>35<br>25<br>25<br>25 |
| 29 | STEP | P29 . 16 | **Fan speed during forced low time** (x100 rpm)<br>F80<br>F120<br>F160<br>F200<br>F240<br>F280 | Do not adjust | Do not adjust | 35<br>16<br>16<br>16<br>16<br>16 |

*continued.....*

## 31 ADVANCED CONTROLS ACCESS CONT'D

| | Press | Display | Description | Lower Limit | Upper Limit | Factory Setting |
|---|---|---|---|---|---|---|
| 30 | STEP | P30 | **Forced low time** (x 9 seconds) | Do not adjust | Do not adjust | 6 |
| 31 | STEP | P31 | **Slow start** — TIME - Temp. differential between flow temp & set point at which slow start ends. | 0 | 15 | 10 |
| | | | **Slow start** — TIME - Modulation rate in slow start X 400rpm/min | 0 | 15 | 02 |
| 32 | STEP | P32 . 05 | **CH post pump time** (minutes)<br>Note 0 = 10 seconds<br>Do not set below 05 | 00 | 99 | 05 |
| 33 | STEP | P33 . 03 | **DHW post pump time** (x 10 seconds) | 00 | 30 | 11 |
| 34 | STEP | P34 . 05 | **CH modulation hysteresis on (°C)** | 00 | 20 | 05 |
| 35 | STEP | P35 . 05 | **CH modulation hysteresis off (°C)** | 00 | 10 | 05 |
| 36 | STEP | P36 . 05 | **DHW modulation hysteresis on (°C)** | -03 | 30 | 03 |
| 37 | STEP | P37 . 05 | **DHW modulation hysteresis off (°C)** | -03 | 30 | 03 |
| 38 | STEP | P38 . 03 | **DHW detection hysteresis on (°C)** | -05 | 30 | 03 |
| 39 | STEP | P39 . 03 | **DHW detection hysteresis off (°C)** | -20 | 30 | 03 |
| 40 | STEP | P40 . 00 | **Blocking time CH** (seconds)<br>Minimum off period between CH demands to reduce cycling | 00 | 30 | 00 |
| 41 | STEP | P41 . 00 | **Blocking time DHW** (seconds)<br>Minimum off period between DHW demands to reduce cycling | 00 | 30 | 00 |
| 42 | STEP | P42 . 00 | **Blocking time DHW to CH** (seconds)<br>0=switch with burner on<br>(x10.2 seconds) | 0 | 30 | 05 |
| 43 | STEP | P43 . 25 | **DHW priority time over CH (secs)**<br>0 = DHW always has priority<br>1-120 mins<br>The DHW has priority over CH until priority is switched back to CH. | 0 | 120 | 30 |
| 44 | STEP | P44 . 00 | **RMCI address**<br>Note -01=RMCI off | 00 | 08 | 00 |

*continued.....*

## 32 ADVANCED CONTROLS ACCESS CONT'D

| | Press | Display | Description | Lower Limit | Upper Limit | Factory Setting |
|---|---|---|---|---|---|---|
| 45 | STEP | P45 . 0 0 | **CH type**<br>x0=Room thermostat<br>x1=Outside temperature<br>x2=N/A<br>x3=N/A<br>x4=0-10V: capacity (using BMS 0-10V kit)<br>x5=0-10V: temperature (using BMS 0-10V kit)<br>x6=+/- control<br>x7=NTC6 on AM4 + RT: capacity<br>x8=0-10V on AM4 + RT: temperature<br>0x=N/A - First digit factory set to '0'. Do not adjust<br>1x=N/A - First digit factory set to '0'. Do not adjust<br>2x=N/A - First digit factory set to '0'. Do not adjust<br>3x=N/A - First digit factory set to '0'. Do not adjust<br>4x=N/A - First digit factory set to '0'. Do not adjust<br>5x=N/A - First digit factory set to '0'. Do not adjust<br>6x=N/A - First digit factory set to '0'. Do not adjust<br>7x=N/A - First digit factory set to '0'. Do not adjust<br>8x=N/A - First digit factory set to '0'. Do not adjust | | | 00 |
| 46 | STEP | P46 . 1 3 | **DHW type**<br>x0=N/A<br>x1=N/A<br>x2=Storage tank with tank sensor kit<br>x3=Storage tank with DHW cylinder thermostat<br>x4=N/A<br>x5=N/A<br>x6=N/A<br>x7=N/A<br>x8=N/A<br>x9=External heat request (by control interface kit)<br>0x=3 way valve normally open<br>1x=hot water pump<br>2x=3way valve normally closed | | | 13 |
| 47 | STEP | P47 . - 0 1 | **Manual fanspeed (for service use)**<br>Note -1=off<br>00 = min fan speed<br>50 = mid rate<br>100 = max fan speed | -01 | 100 | -01 |
| 48<br>49<br>50<br>51 | | | **N/A** | | | |
| 53 | STEP | | **Low/Off cycle**<br>00<br>x0=off<br>x1=on<br>**Special pump function CH/DHW**<br>0x=CH normal pump function, DHW normal pump function<br>1x=CH pump off during heat request, DHW normal pump function<br>2x=CH pump normal function, DHW pump 5 sec on delay after heat request<br>3x=CH pump off during heat request, DHW pump 5 sec on delay after heat request | | | |
| 54 | STEP | | N/A | Do not adjust | Do not adjust | 70 |
| 56 | STEP | | Slow start<br>0=CH only<br>1=CH & DHW | 0 | 1 | 1 |

## 33 INFORMATION MODE (with code)

See Frame 25.

## 34 FAN MODE (with code)

| Press | Display | Description |
|---|---|---|
| MODE | FAN | Fan speed |
| STEP | 4800 | Actual fan speed e.g. 5500rpm |

## 35 COMMUNICATION MODE (with code)

| Press | Display | Description |
|---|---|---|
| MODE | CONN | In this mode the communication between the boiler control module, optional control interface kit, and optional programmable room thermostat or modulating sequencer is shown. |
| STEP | | No communication |
| | FLASHING | There is only communication between the boiler control module and optional controls interface kit. |
| | FLASHING | There is communication between all devices. |

## 36 ERROR MODE (with code)

| Press | Display | Description |
|---|---|---|
| MODE | ERRO | In error mode the last error is shown, and the boiler status and readings at that time are available<br>The 1st digit flashes and shows the current step.<br>The last two digits show the error code. |
| STEP | FLASHING<br>1 36 | Error code<br>(see Table on pages 42 and 43 for full list) |
| STEP | 2 00 | Boiler sequence at time of error (refer to Frame 23) |
| STEP | 3 00 | Flow temperature T1 at time of error |
| STEP | 4 00 | Return temperature T2 at time of error |
| STEP | 5 -36 | DHW temperature T3 at time of error |
| STEP | 6 -36 | Heat exchanger block temperature T4 at time of error |

## 37 RETURN TO NORMAL OPERATING MODE

| Press | Display | Description |
|---|---|---|
| RESET | 0 21 | Press the reset button, or press 'MODE' several times, to return to (Stby) normal operating mode or<br>if no buttons are touched the boiler will automatically reset after 15 mins. |

## 38 COMMISSIONING AND TESTING

### A. ELECTRICAL INSTALLATION

1. Checks to ensure electrical safety should be carried out by a competent person.
2. ALWAYS carry out the preliminary electrical system checks, i.e. earth continuity, polarity, resistance to earth and short circuit, using a suitable meter.

### B. GAS INSTALLATION

1. The whole of the gas installation, including the meter, should be inspected and tested for soundness and then purged in accordance with the recommendations of the relevant standards listed on page 4.

   In IE refer to I.S.820:2002.

***WARNING.*** *Whilst effecting the required gas soundness test and purging air from the gas installation, open all windows and doors, extinguish naked lights and DO NOT SMOKE.*

## 39 INITIAL LIGHTING

1. Check that the system has been filled and the boiler is not air locked - air in the boiler could damage the heat exchanger. For this reason if an automatic air vent has been fitted it must never be off.
2. Check that all the drain cocks are closed and any valves in the flow and return are open.
3. Check that the GAS SERVICE COCK IS ON.
4. Check the indication on the pressure gauge. If the pressure is less than 0.8 bar the installation should be filled up first (sealed system only).
5. Switch the electricity supply ON and check that all the external controls are calling for heat. Check burner switch is set to on.
6. The boiler will commence the ignition sequence. The circulation pump is energised, whilst operating a DHW valve if required. The fan is run up to starting speed, and the air pressure switch actuated. The fan then carries out a pre-purge before moving to ignition speed. A spark is started and the gas valve opens. Ignition must occur in 3 seconds, and once detected the boiler starts operating. The boiler is held at a low stabilisation rate for the first 50 seconds. After the stabilisation period the boiler modulates to achieve the set flow temperature at a restricted ramp up rate. As the boiler gets within 10°C of the set point it is free to modulate at normal rate. If after 5 attempts the boiler has failed to light then it will lock out. Press the reset button to restart the ignition sequence.

**Gas Rate**

7. The gas valves are preset at the factory to nominal values. Dependant on site installation conditions (e.g. flue length) the boiler performance can vary slightly. To check the performance, operate the boiler and measure the flue $CO_2$ values at maximum and minimum rates, whilst adjusting the gas valve if necessary. (Refer to Frame 44).
8. Operate the boiler for 10 minutes and check the gas rate (Table 1). You should obtain a value at least 90% of the nominal.
9. Set all the boiler parameters (refer to Frame 29) to appropriate settings.

## 40 GENERAL CHECKS

Make the following checks for correct operation.

1. The correct operation of ANY secondary system controls should be proved. Operate each control separately and check that the main burner or circulating pump, as the case may be, responds.
2. Water circulation system;
   - **a.** With the system HOT examine all water connections for soundness.
   - **b.** With the system still HOT, turn off the gas, water and electricity supplies to the boiler and drain down to complete the flushing process.
   - **c.** Refill and vent the system, clear all air locks and again check for water soundness.
   - **d.** Balance the system.
3. Check the condensate drain for leaks and check it is discharging correctly.
4. Finally set the controls to the User's requirements.

**Note.** *If optional kits are fitted then refer to the instructions supplied with the kits.*

## 41 HANDING OVER

ROUTINE OPERATION

Full instructions covering routine lighting and operation of the boiler are given on the Lighting and Operation Instruction Label located on the inside of the lower front door.

Draw the attention of the boiler owner or his representative to the Lighting and Operating Instruction Label. Give a practical demonstration of the lighting and shutting down of the boiler.

Describe the function of the boiler and system controls and show how they are adjusted and used.

Hand these Installation and Servicing Instructions/User's Instructions and Log book to the customer and request him to keep them in a safe place for ready reference. For IE, it is necessary to complete a "Declaration of Conformity" to indicate compliance to the appropriate standard.

**IMPORTANT.**

Point out to the owner that the boiler must have regular maintenance and cleaning, at least annually, in order to ensure reliable and efficient operation. Regular attention will also prolong the life of the boiler and should preferably be performed at the end of the heating season.

After servicing, complete the service section of the log book and return to the owner or their representative.

Recommend that a contract for this work should be made with the regional gas authority or a CORGI registered heating installer. In IE servicing work must be carried out by a competent person.

## 42 SAFETY

It is the law that any service work must be carried out by a registered CORGI installer. In IE service work must be carried out by a competent person.

***WARNING*. Always turn off the gas supply at the gas service cock, and switch off and disconnect the electricity supply to the appliance and any external controls before servicing or replacing components.**

**NOTE.**

*When the burner switch is in the off position the boiler control module remains live.*

**IMPORTANT.**

After completing the servicing or replacement of components always:

- Test for gas soundness.
- Test the burner manifold flanges for soundness. This can be done with leak detection spray whilst operating the boiler. The gas valve and controls must be shielded from the spray.
- Check the water system is correctly filled and free of air. Air in the boiler could cause damage to the heat exchanger. For this reason if an automatic air vent is fitted it must never be shut off.
- Check the inner front and outer jacket panels are correctly fitted.
- With the system hot examine all water connections for soundness.
- Check the gas rate and measure the combustion $CO/CO_2$ content. Refer to Frame 44 for reference on how to force the burner to maximum and minimum gas rates. The $CO/CO_2$ ratio of the flue gas should not be greater than 0.004 ratio.
- Carry out functional checks as appropriate.

## 43 SERVICING SCHEDULE

To ensure the continued safe and efficient operation of the appliance it is recommended that it is checked at regular intervals and serviced as necessary. The frequency of servicing will depend upon the installation condition and usage but should be carried out at least annually.

**Ideal Stelrad Group** does not accept any liability resulting from the use of unauthorised parts or the repair and servicing of appliances not carried out in accordance with the Company's recommendations and specifications.

**Note**.

*Some aluminium oxide build-up within the heat exchanger assembly is quite usual with this type of condensing boiler. Though removal and cleaning is recommended annually, the heat exchanger, sump and condensate trap must be inspected and cleaned after a maximum of 2 years operation.*

1. Light the boiler and carry out function checks, noting any operational faults.
2. Run the boiler for 10 minutes and then check the gas consumption rate. Refer to Frame 44 for reference on how to force the burner to maximum and minimum rates.
3. For correct boiler operation the $CO/CO_2$ ratio of the flue gas should not be greater than 0.004 ratio. If this is the case and the gas input is at least 90% of the nominal, once compliance with the note above is ensured, then no further action need be taken. If not proceed to 4. Refer to Frames 45 to 51 for guidance.
4. Refer to Frame 42.
5. Remove and inspect the fan/venturi assembly. Refer to Frame 46.
6. Remove the burner manifold and inspect the electrodes and sightglass. Refer to Frames 47 and 54.
7. Remove and clean the burner. Refer to Frame 48.
8. Inspect the heat exchanger through the burner opening. Optionally remove the inspection covers on the left hand side of the heat exchanger. If there are signs of aluminium oxide build up, spray water down the flueways taking care not to get water on the gas valve and controls. Refer to Frame 49.
9. Remove the sump cover and scrape out any deposits. Refer to Frame 50.
10. Clean the condensate trap. Refer to Frame 51.
11. Check that the flue terminal and air inlet are unobstructed and that the fluing and ducting are correctly sealed.
12. After servicing refer to Frame 42 for final safety checks.

## 44 GAS VALVE ADJUSTMENT

**Maximum rate adjustment**

1. Switch the boiler on and operate for 10 minutes.
2. To ensure the boiler operates at maximum rate without modulating set the fan speed to maximum.
3. To set the fan speed to maximum. Press and hold in the 'mode' and '+' buttons simultaneously. The display will show as the first digit indicating the boiler is H operating at maximum rate.
4. Using the maximum rate adjustment screw, adjust the valve until the $CO_2$ value measures 9.7% ± 0.2 (nb clockwise reduces $CO_2$).

**Minimum rate adjustment**

5. To ensure the boiler operates at minimum rate without modulating, set the fan speed to minimum
6. To set the fan speed to minimum. Press and hold in the 'mode' and '-' buttons simultaneously. The display will show as the first digit indicating the boiler is L operating at minimum rate.
7. Remove the protective cap and then using the offset adjustment screw, adjust the valve until the $CO_2$ value measures 9.5% ± 0.2 (nb anticlockwise reduces the $CO_2$ level). The offset adjustment is a lot more sensitive than the throttle adjustment
8. Re-check the $CO_2$ level at maximum rate and repeat steps 3 to 7 if necessary.
9. Press the '+' and '-' buttons simultaneously to return to normal operating mode.
10. Seal adjustment screw with tamper proof paint.

**Note.**

It is possible to switch off the CH/DHW systems if the mode and +/- buttons are not held simultaneously. Refer to Frame 23 under the heading CH/DHW Systems for guidance.

**F80 & F120 models**

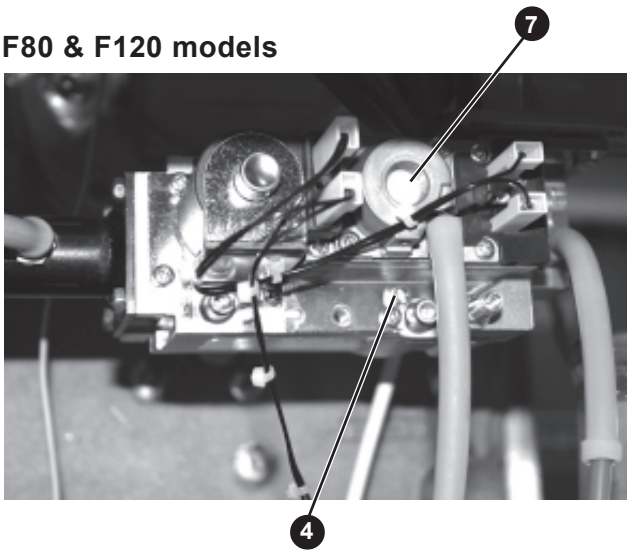


**F160 to F280 models**

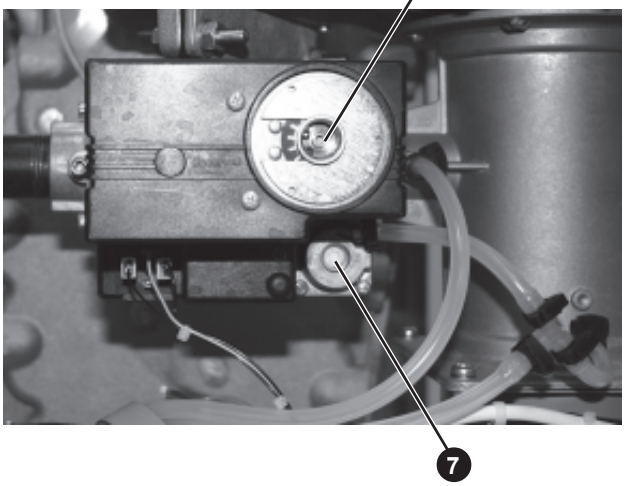

## 45 CASING REMOVAL AND ACCESS

**Front Panels**

1. Pull the front panel forwards at the top, lift off the bottom retaining lugs and remove.

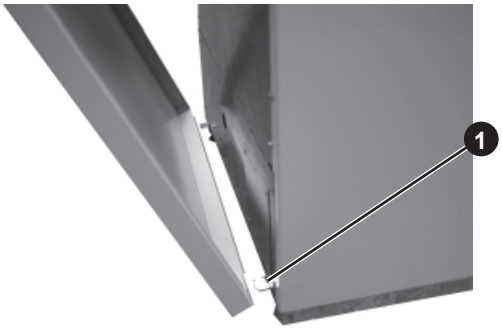


2. Loosen 3 screws on one side of the inner front panel and undo the 3 screws from the other side. The panel will now slide to one side for removal.

**Control Fascia Panel**

3. Remove the 2 screws securing the control fascia panel. Carefully lift it slightly and lower the top forwards allowing it to rest on the hinge lugs.

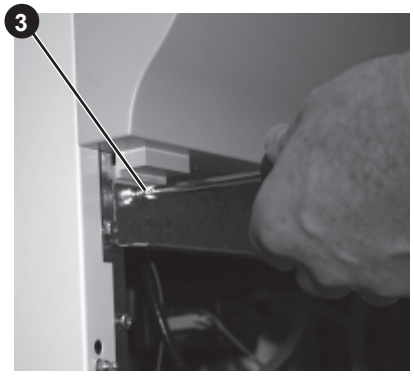


4. To remove completely, release the ribbon cable from the display board, raise slightly and withdraw.

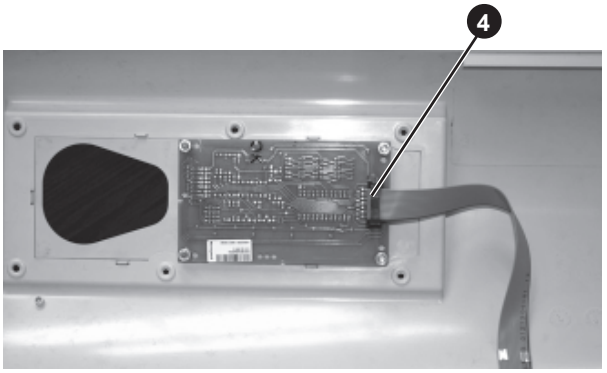


**Top Panel**

5. Undo the 2 screws at the rear edge of the panel, lift from the side panel studs and remove.

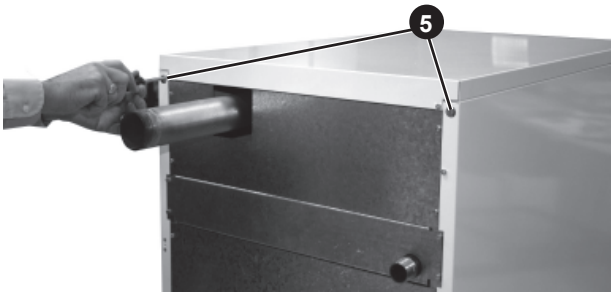


**Side Panels**

6. Undo the 2 screws at the rear and the 2 screws at the front of each panel.
7. Lift from the frame and remove.

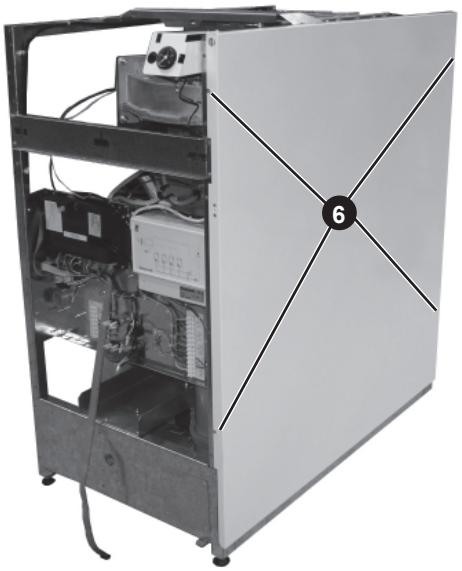

## 46 REMOVAL OF FAN / VENTURI INSPECTION

1. Refer to Frame 42.
2. Remove the jacket front, inner front, jacket right, jacket top and controls fascia panels. (Refer to Frame 45).
3. Disconnect the electrical connections from the fan.
4. Remove 4 bolts securing inlet air pipe/silencer to the venturi taking care to retain O ring seal (F160-F280 only, F80-F120 employ push fit).
5. Whilst providing temporary support for the gas valve remove the 4 screws securing the gas valve (F160-F280) or gas valve outlet elbow (F80-F120) to the venturi.
6. Remove sensing pipe from venturi (F160-F280 only).
7. Whilst providing temporary support for the fan/venturi remove the 4 fasteners securing the fan outlet connection. Lift the fan/venturi assembly clear of the boiler taking care to retain the fan outlet gasket.
8. Remove the 4 screws securing the venturi to the fan inlet, taking care to retain the O ring.
9. Re-assemble in reverse order replacing any seals/ gaskets which show signs of wear.
10. Refer to Frame 42 for final safety checks.

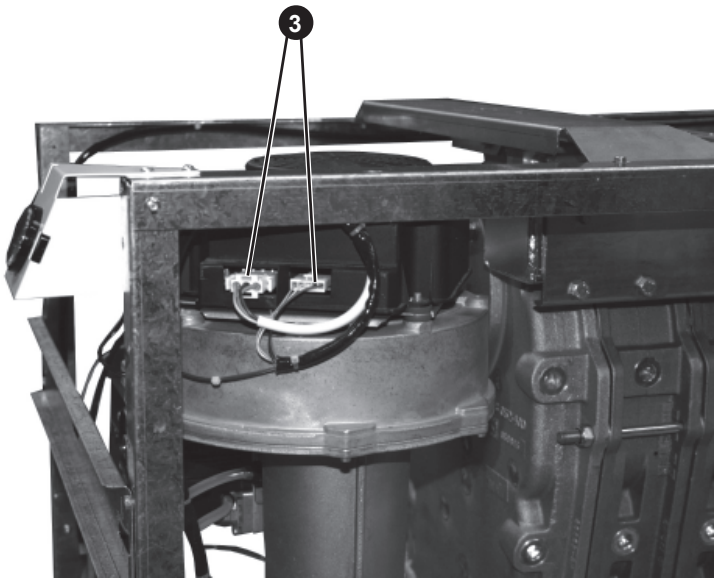


## 47 REMOVAL OF BURNER MANIFOLD

1. Refer to Frame 42.
2. Refer to Frame 46 for removal of fan/venturi assembly.
3. Disconnect the ignition and earth lead from the electrodes.
4. Whilst providing temporary support for the burner manifold remove the 4 retaining nuts.
5. Withdraw the burner manifold from the boiler taking care not to damage the electrodes.
6. Re-assemble in reverse order, replacing any seals/ gaskets which show signs of wear. The nyloc nuts should be renewed. Ensure the short earth lead is secured under the top LH nut.
7. Refer to Frame 42 for final safety checks.

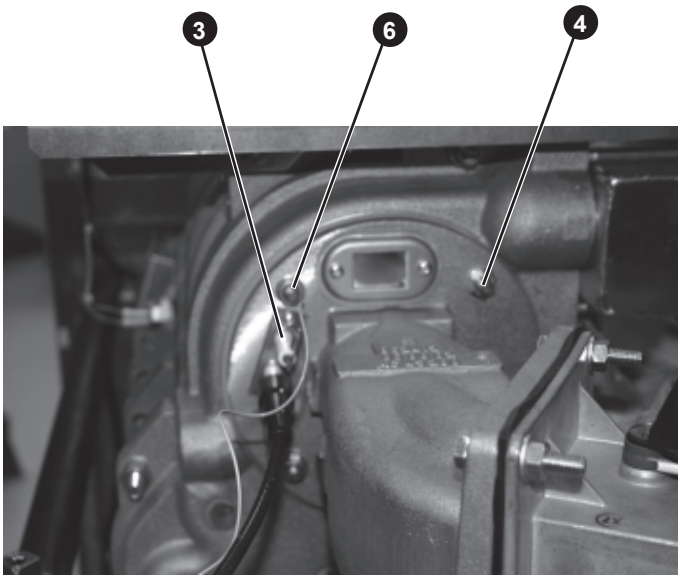

## 48 REMOVAL / CLEANING OF BURNER

1. Refer to Frame 42.
2. Refer to Frame 47 for removal of burner manifold.
3. Remove the gasket from the 4 studs.
4. Draw the burner out of the heat exchanger.
5. The burner can be cleaned on the inside surface using a soft brush and/or vacuum. The metal fibre outer surface must not be brushed. If the burner is showing signs of damage it must be replaced.
6. Re-assemble in reverse order replacing any seals/gaskets which show signs of wear. When re-fitting the burner there are 2 small lugs cast into the end of the combustion chamber which support the end of the burner.
7. Refer to Frame 42 for final safety checks.

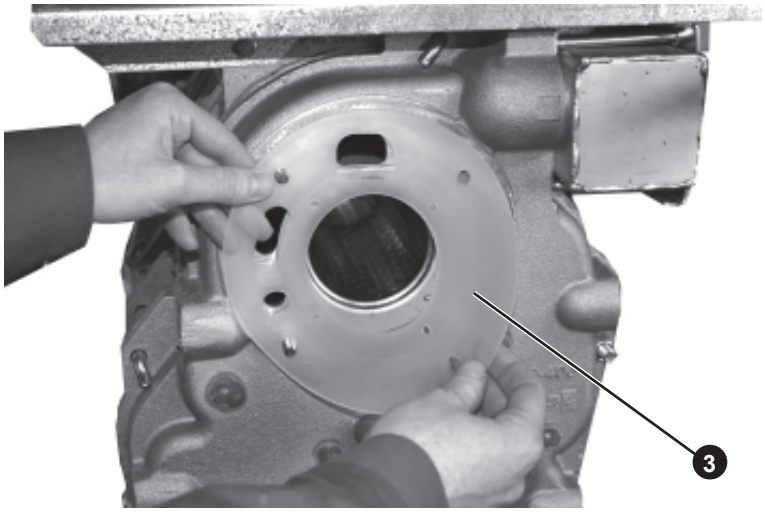


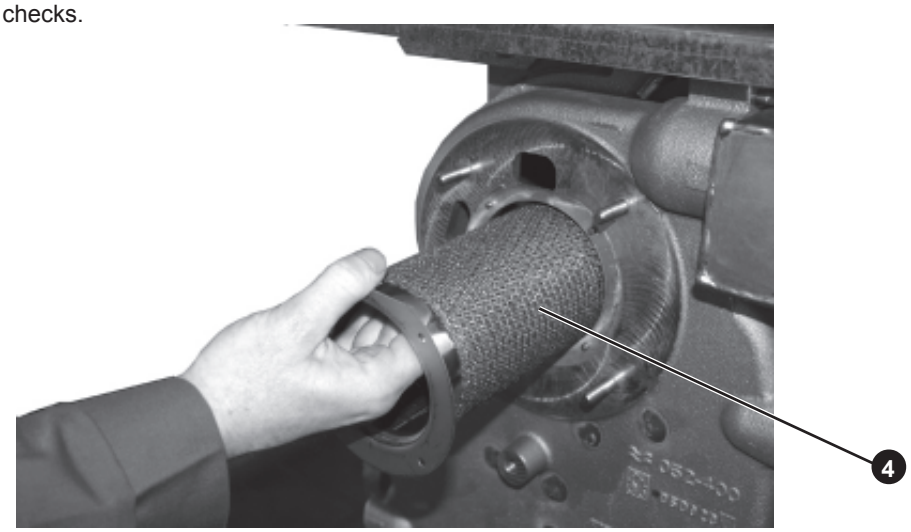


## 49 REMOVAL OF HEAT EXCHANGER INSPECTION COVERS

1. Refer to Frame 42.
2. Remove the jacket front, inner front, controls fascia, top and left side panels. (Refer to Frame 45).
3. Remove the 6 securing nuts on each inspection cover and withdraw, taking care to retain the gasket.
4. Re-assemble in reverse order replacing the gasket if it is showing signs of wear.
5. Refer to Frame 42 for final safety checks.

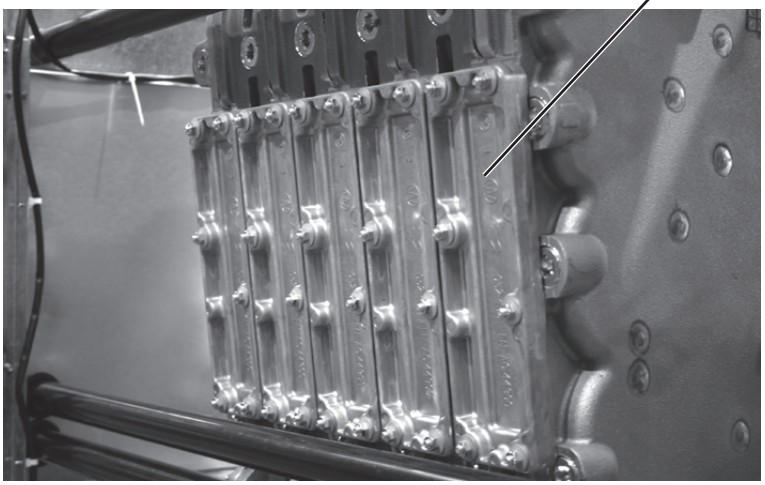

## 50 REMOVAL OF SUMP COVER

1. Refer to Frame 42.
2. Remove the jacket front and inner front panels. (Refer to Frame 45).
3. Remove the 6 nuts and withdraw the sump cover plate taking care to retain the gasket.
4. Scrape out any deposits within the sump.
5. Re-assemble in reverse order replacing the sump cover plate gasket if it is showing signs of wear.
6. Refer to Frame 42 for final safety checks.

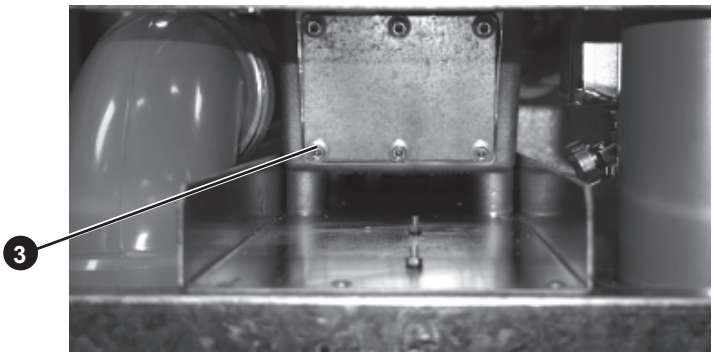


## 51 CLEANING CONDENSATE TRAP

1. Refer to frame 42.
2. Remove the jacket front, inner front, controls fascia, top and left side panels. (Refer to Frame 45).
3. Place a container beneath the condensate trap to collect the condensate contained within.
4. Remove bottom nut/plug from the condensate trap whilst collecting the condensate which will drain out.
5. Withdraw the cartridge and ball from within the condensate trap. Thoroughly clean the cartridge and ball by flushing with water.
6. If deposits are visible in the condensate trap body, it can be removed by unscrewing the inlet and outlet nuts. Thoroughly flush the body with water.
7. Re-assemble in reverse order, replacing the condensate trap if there are signs of wear to any seals or the ball.
8. Refer to Frame 42 for final safety checks.

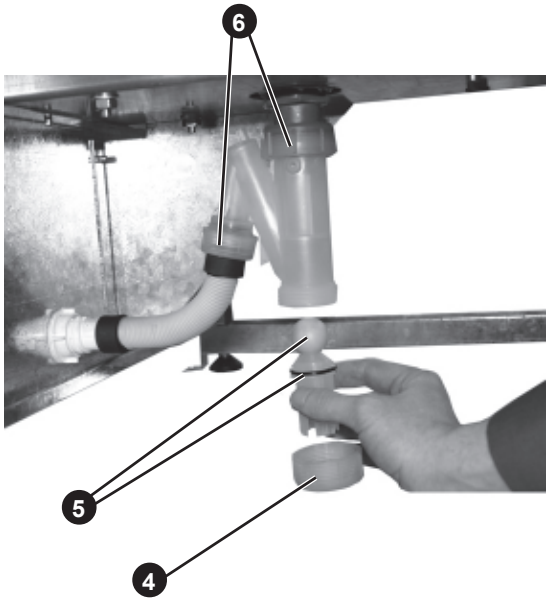

## 52 GAS VALVE REPLACEMENT

1. Refer to Frame 42.
2. Remove the jacket front, inner front and control fascia panels. (Refer to Frame 45).
3. Remove the 4 screws securing the controls fascia support bracket and withdraw.
4. Disconnect the electrical connections from the gas valve.
5. Release the securing clip and disconnect the pressure sensing tube from the gas valve.
6. Whilst providing temporary support for the inlet gas pipe, remove the 4 screws securing the inlet flange.
7. Whilst providing temporary support for the gas valve, remove the 4 screws securing the gas valve outlet.
8. Withdraw the gas valve taking care to retain the inlet and outlet O rings.
9. Re-assemble in reverse order. Re-secure the clip over the pressure sensing tube using pliers to apply the grip. Replace gas valve inlet/outlet O rings if showing signs of wear.
10. Refer to instruciton sheet with spare gas valve for correct setting procedure.
11. Refer to Frame 42 for final safety checks.

F160-F280

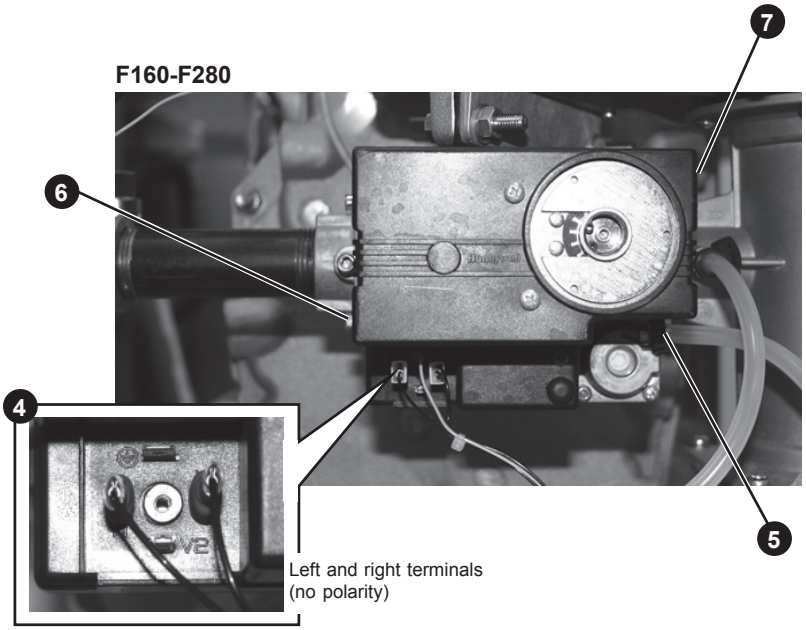


F80-F120

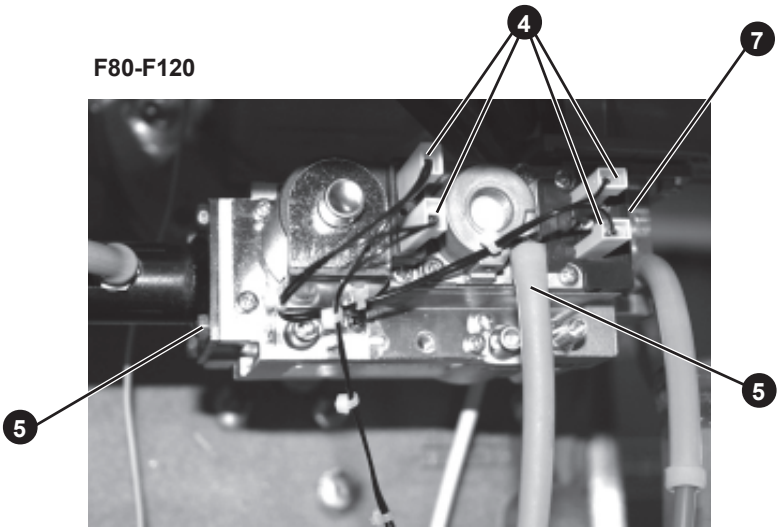


## 53 AIR PRESSURE SWITCH REPLACEMENT

1. Refer to Frame 42.
2. Remove the jacket front and inner front panels. (Refer to Frame 45).
3. Remove the 2 electrical connections from the air pressure switch (no polarity) which is located at the top rear of the main control panel.
4. Release the securing clips and disconnect the pressure sensing tubes.
5. The air pressure switch can now be unclipped from its supporting cradle.
6. Re-assemble in reverse order. Connect the sensing tube from the T-piece to P1 and the sensing tube from the gas valve outlet elbow (F80-F120) or venturi gas valve connections (F160-F280) to P2.
7. Refer to Frame 42 for final safety checks.

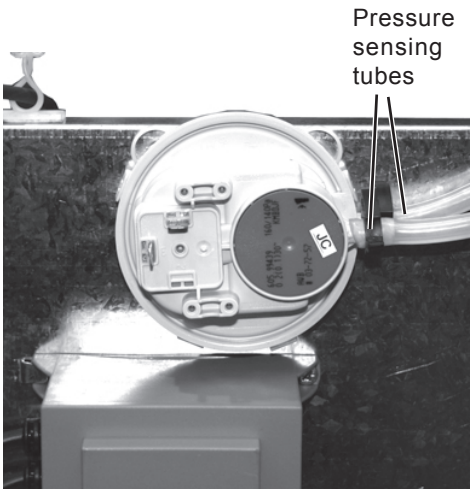

## 54 IGNITION/DETECTION ELECTRODE TESTING/REPLACEMENT

1. Refer to Frame 42.
2. Remove the jacket front and inner front panels. Refer to Frame 45.
3. It is possible to measure the ionisation current with a voltmeter set at 0-10VDC. (0-10VDC = 0-10 micro amps ionisation current).
4. With the boiler running, connect a meter between the terminal marked ⌀ and earth.
5. A reading below 3V indicates a fault.
6. To replace the ignition/detection electrode remove the controls fascia, pull off the HT and earth leads from the spark/detection electrode.
7. Remove the 2 nuts and washers.
8. Check the electrode gap is 4.0mm.
9. Replace the electrode using the new gasket provided.
10. Re-assemble in reverse order.
11. Refer to Frame 42 for final safety checks.

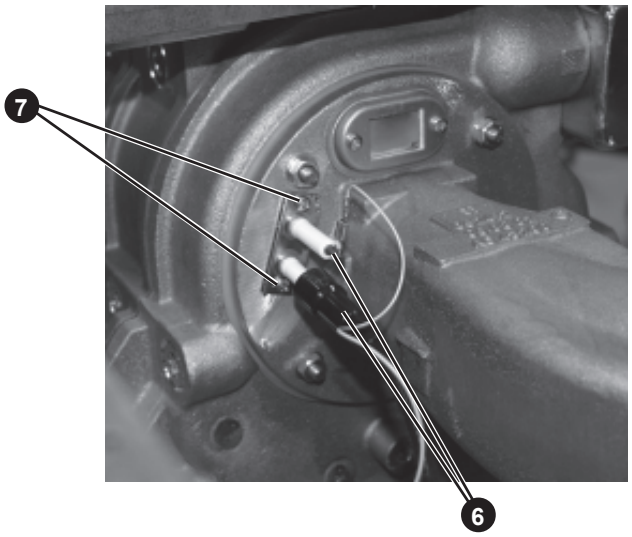


## 55 PRESSURE GAUGE REPLACEMENT

1. Refer to Frame 42, then:
2. Remove the jacket front, control fascia, top, and right side panels. (Refer to Frame 45).
3. Unscrew the nut retaining the capillary from the self sealing fitting. Refer to 'A' in Frame 56.
4. Compress the retaining lugs and push forwards to remove the gauge from the bracket.
5. Replace the pressure gauge.
6. Reassemble in reverse order.
7. Refer to frame 42 for final safety checks.

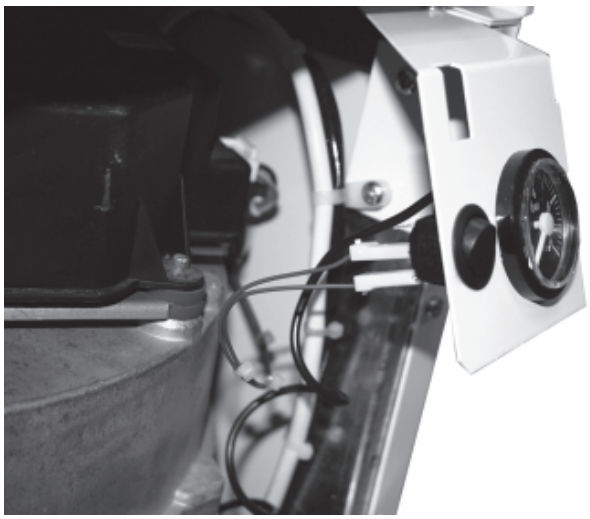

## 56 WATER PRESSURE SWITCH REPLACEMENT

1. Refer to Frame 42.
2. Remove the jacket front, control fascia, top and right side panels. (Refer to Frame 45).
3. Isolate water circuit and drain boiler.
4. Pull off the electrical connections (no polarity) from the pressure switch.
5. Unscrew the water pressure switch
6. Fit the new water pressure switch.
7. Re-assemble in reverse order.
8. Re-fill the system ensuring all the air in the heat exchanger is vented.
9. Refer to frame 42 for final safety checks.

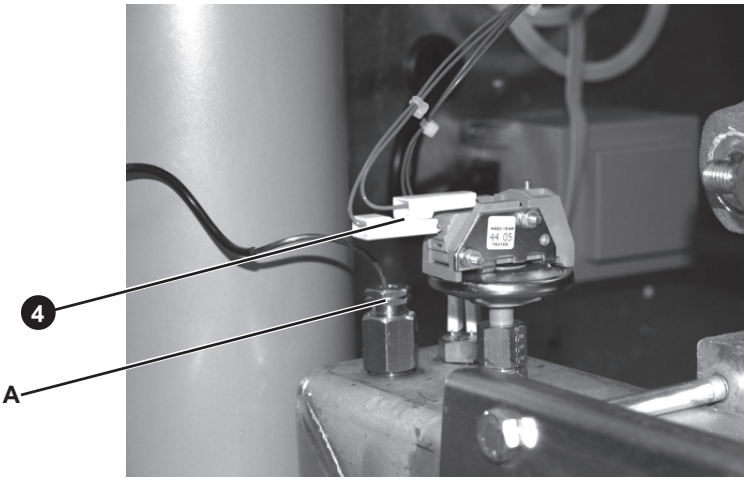


## 57 FLOW / RETURN / HE BLOCK / FLUE THERMISTOR REPLACEMENT

1. Refer to Frame 42
2. Remove the jacket panels as appropriate. (Refer to Frame 45).
3. Isolate water circuit and drain boiler.
4. Pull off the electrical connections from the thermistor.
5. Unscrew the thermistor.
6. Fit the new thermistor with built in ‘O‘ ring seal. Do not overtighten.
7. Re-assemble in reverse order.
8. Refill the system ensuring all the air in the heat exchanger is vented.
9. Refer to Frame 42 for final safety checks.

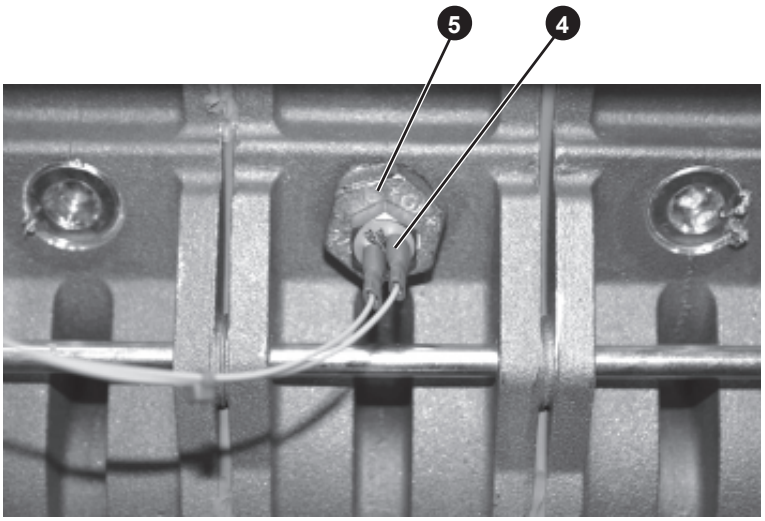


## 58 TRANSFORMER REPLACEMENT

1. Refer to Frame 42.
2. Remove the jacket front, inner front, controls fascia and top panels. Refer to Frame 45.
3. Disconnect the transformer connection from the boiler control module. (Refer to 'A' in Frame 59).
4. Remove the 2 screws on the left side of the transformer whilst supporting its weight.
5. Disengage the transformer from the 2 retaining lugs by moving it to the left. Remove from boiler.
6. Re-assemble in reverse order.
7. Refer to Frame 42 for final safety checks.

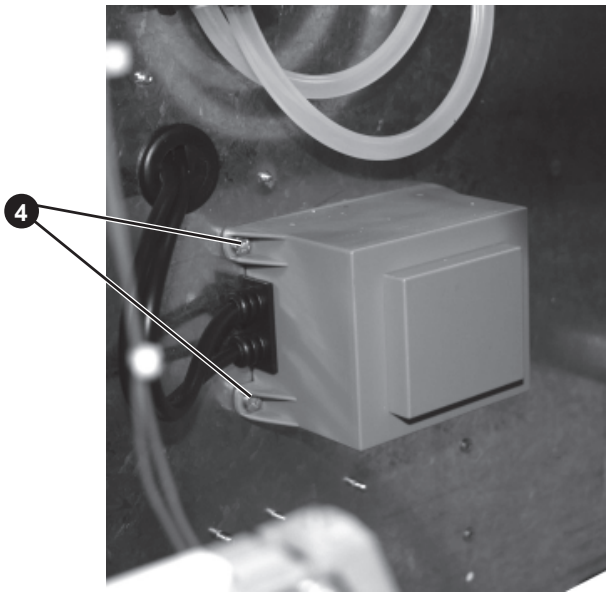

## 59 BOILER CONTROL MODULE REPLACEMENT

1. Refer to Frame 42.
2. Remove the front and inner front panels. (Refer to Frame 45).
3. Disconnect the electrical connections from the module.
4. Remove the 4 screws securing the control module to the main control panel.
5. Re-assemble in reverse order.
6. Refer to Frame 42 for final safety checks.

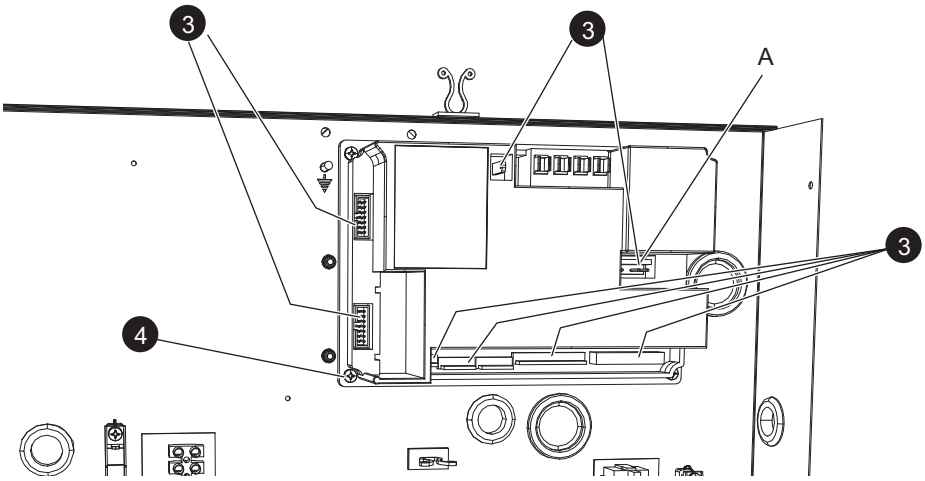


im8254

## 60 DISPLAY BOARD REPLACEMENT

1. Refer to Frame 42.
2. Remove the front and inner front panels. Lower the controls fascia. (Refer to Frame 45).
3. Disconnect the electrical connection from the display board.
4. Undo and remove the 4 plastic nuts.
5. Lift the display board from the 4 studs.
6. Fit the new display board and re-assemble in reverse order.
7. Refer to Frame 42 for final safety checks.

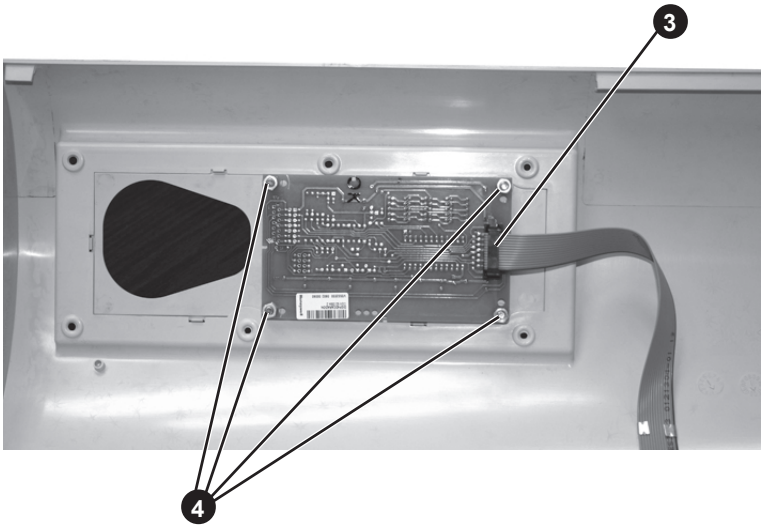

# FAULT FINDING

Before attempting any electrical fault finding ALWAYS carry out the preliminary electrical system checks as detailed in the Instructions for the British Gas Multimeter or other similar commercially available meter.

The preliminary electrical system checks are the FIRST electrical checks to be carried out during a fault finding procedure.

On completion of any service/fault finding task which has required the breaking and remaking of electrical connections the following checks MUST be repeated:

**a** Earth continuity

**b** Polarity

**c** Resistance to earth

Detailed instructions on the replacement of faulty components are contained in the 'Servicing' section of these Installation & Servicing Instructions.

Before carrying out Fault Finding ensure that all external controls are calling for heat. There should be 230V ± 10% available at the control box connection.

The boiler control module has replaceable fuses protecting the 230V and 24V circuits. A common reason for the 230V fuse to blow would be if the pump connected to the boiler was drawing more than 1 amp.

If the 230V fuse has blown, the display will be blank. Check for short circuits and pump loads before replacing the fuse.

**Boiler Control Module Error Codes**

| Code | Description | Action |
|---|---|---|
| FUSE | 24V circuit dead | Check Transformer & replace if necessary<br>Check 24V fuse on Control Board<br>If 24V fuse blown check for short circuits before replacing |
| 00 | Flame Error (signal present when there should not be) | Replace Control Module |
| 02 | No ignition after restart | Check inlet gas pressure<br>Check wiring to ignition/detection electrode<br>Check condition of ignition/detection electrode<br>If above OK replace control module |
| 03 | Internal Failure | Check gas valve wiring<br>Check gas valve solenoids not open circuit<br>Check general wiring harness and connections<br>If all OK. replace control module |
| 04 | Non-volatile lockout | Press reset |
| 05 | Internal failure | Check wiring harness & connections<br>If wiring OK replace control module |
| 06 | Internal failure | Check wiring harness & connections<br>If wiring OK replace control module |
| 07 | Internal failure | Check wiring harness & connections<br>If wiring OK replace control module |
| 08 | Air Pressure Switch did not close | Check flue for blockage<br>Check/clean burner<br>Check Air Pressure Switch sensing pipes condition<br>Check fan speed<br>Check air Pressure Switch & replace if necessary |
| 11 | EPROM read/write error | Press reset. If fault keeps re-occuring Replace Control Module. |
| 12 | 24V fuse blown | Check 24V fuse on Control Board<br>If 24V fuse blown check for short circuits before replacing<br>Check gas valve leads & solenoids for short circuit |
| 13 | Internal failure | Check wiring harness & connections<br>If wiring OK replace control module |
| 14 | Internal failure | Check wiring harness & connections<br>If wiring OK replace control module |
| 15 | Internal failure | Check wiring harness & connections<br>If wiring OK replace control module |
| 16 | Internal failure | Check wiring harness & connections<br>If wiring OK replace control module |
| 17 | Internal failure | Check wiring harness & connections<br>If wiring OK replace control module |
| 18 | Flow temperature too high | Check no air in system or boiler<br>Check adequate flow of water through boiler |
| 19 | Return temperature too high | Check no air in system or boiler<br>Check adequate flow of water through boiler |
| 25 | Flow temperature rise too fast | Check no air in system or boiler<br>Check adequate flow of water through boiler |
| 28 | No tacho signal from fan | Check wiring to fan<br>If wiring OK replace fan |

**Boiler Control Module Error Codes Continued**

| Code | Description | Action |
|---|---|---|
| 29 | Incorrect tacho signal from fan | Check wiring to fan. If wiring OK replace fan. |
| 30 | Flow/return temperature differential too high | Check no air in system or boiler<br>Check adequate flow of water through boiler |
| 31 | Flow thermistor short circuit | Check wiring<br>Disconnect terminals from thermistor & confirm short circuit using meter<br>Replace thermistor |
| 32 | Return thermistor short circuit | Check wiring<br>Disconnect terminals from thermistor & confirm short circuit using meter<br>Replace thermistor |
| 33 | Tank sensor short circuit | Check wiring<br>Disconnect terminals from tank sensor & confirm short circuit using meter<br>Replace tank sensor |
| 35 | Flue thermistor short circuit | Check wiring<br>Disconnect terminals from thermistor & confirm short circuit using meter<br>Replace thermistor |
| 36 | Flow thermistor open circuit | Check wiring<br>Disconnect terminals from thermistor & confirm open circuit using meter<br>Replace thermistor |
| 37 | Return thermistor open circuit | Check wiring<br>Disconnect terminals from thermistor & confirm open circuit using meter<br>Replace thermistor |
| 38 | Tank sensor open circuit | If not fitted check parameter 46 settings<br>Check wiring<br>Disconnect terminals from tank sensor & confirm open circuit using meter<br>Replace tank sensor |
| 40 | Flue thermistor open circuit | Check wiring<br>Disconnect terminals from thermistor & confirm open circuit using meter<br>Replace thermistor |
| 44 | Internal Failure | Check wiring harness & connections<br>If wiring OK replace control module |
| 52 | Flue gas temperature too high | Check no air in system or boiler<br>Check adequate flow of water through boiler |
| 60 | Error reading parameters | Press reset. If fault keeps re-occuring replace control module. |
| 61 | Air pressure switch closed when it should be open | Check for blockages in air pressure switch sensing pipes<br>Check air pressure switch and replace if necessary |
| 107 | Heat exchanger thermistor short circuit | Check wiring<br>Disconnect terminals from thermistor & confirm short circuit using meter |
| 108 | Heat exchanger thermistor open circuit | Check wiring<br>Disconnect terminals from thermistor & confirm open circuit using meter<br>Replace thermistor |
| 109 | Heat exchanger temperature too high | Check no air in system or boiler<br>Check adequate flow of water through boiler |
| 110 | Heat exchanger temperature too low | Check no air in system or boiler<br>Check adequate flow of water through boiler |
| 111 | Heat exchanger to return temperature differential too high | Check no air in system or boiler<br>Check adequate flow of water through boiler |
| 112 | Heat exchanger temperature rise too fast | Check no air in system or boiler<br>Check adequate flow of water through boiler |
| 113 | No valid mains frequency detected | Check power supply to boiler |
| 114 | Invalid or conflicting cascade address | Press reset. If fault keeps re-occuring replace control module. |
| 115 | Internal error | Check wiring harness & connections<br>If wiring OK replace control module |

**Boiler Control Module Blocking Codes**

| Code | Description | Action |
|---|---|---|
| 08 | Air Pressure Switch did not close | Check flue for blockage<br>Check/clean burner<br>Check Air Pressure Switch sensing pipes condition<br>Check fan speed<br>Check air Pressure Switch & replace if necessary |
| 18 | Flow temperature too high | Check no air in system or boiler<br>Check adequate flow of water through boiler |
| 19 | Return temperature too high | Check no air in system or boiler<br>Check adequate flow of water through boiler |
| 24 | Return temperature > Flow temperature for excessive time | Check no air in system or boiler<br>Check adequate flow of water through boiler |
| 25 | Flow temperature rise too fast | Check no air in system or boiler<br>Check adequate flow of water through boiler |
| 28 | No tacho signal from fan | Check wiring to fan<br>If wiring OK replace fan |
| 29 | Incorrect tacho signal from fan | Check wiring to fan. If wiring OK replace fan. |
| 30 | Flow/return temperature differential too high | Check no air in system or boiler<br>Check adequate flow of water through boiler |
| 33 | Tank sensor short circuit | Check wiring<br>Disconnect terminals from tank sensor & confirm short circuit using meter<br>Replace tank sensor |
| 35 | Flue thermistor short circuit | Check wiring<br>Disconnect terminals from thermistor & confirm short circuit using meter<br>Replace thermistor |
| 38 | Tank sensor open circuit | If not fitted check parameter 46 settings<br>Check wiring<br>Disconnect terminals from tank sensor & confirm open circuit using meter<br>Replace tank sensor |
| 40 | Flue thermistor open circuit | Check wiring<br>Disconnect terminals from thermistor & confirm open circuit using meter<br>Replace thermistor |
| 43 | Parameter values in EEPROM values out of range | Replace control module. |
| 52 | Flue gas temperature too high | Check no air in system or boiler<br>Check adequate flow of water through boiler |
| 65 | Fanspeed during start not within the dead band | Check wiring to fan. If wiring OK replace fan. |
| 109 | Heat exchanger temperature too high | Check no air in system or boiler<br>Check adequate flow of water through boiler |
| 116 | Mains frequency deviation > 1.5Hz or processor oscillator error | If mains supply frequency OK replace control module. |
| 118 | Flame current lost during burner on | Check wiring<br>Check condition of ignition/detection electrode & replace if necessary |

## 61 TECHNICAL CHARACTERISTICS - TEMPERATURE SENSORS

The table below gives the relationship between temperature and resistance for the following sensors; flow thermistor, return thermistor, flue thermistor, heat exchanger thermistor, outside temperature sensor and DHW tank sensor.

| Temperature in °C | Resistance in ohm | Temperature in °C | Resistance in ohm |
|---|---|---|---|
| | | | |
| 10 | 22,800 | 60 | 32,250 |
| 20 | 14,700 | 70 | 2,340 |
| 30 | 9,800 | 80 | 1,710 |
| 40 | 6,650 | 90 | 1,260 |
| 50 | 4,610 | 100 | 950 |

# SHORT LIST OF PARTS

The following are parts commonly required as replacements, due to damage or expendability.

A full list of spares is held by **Ideal Stelrad Group** distributors and merchants.

Their failure or absence will affect the safety and/or performance of this appliance.

When ordering spare parts please quote:

1. Boiler model
2. Boiler serial no. (refer to the data plate on boiler*)
3. Boiler P.I. No. (refer to the data plate on boiler*)
4. Description
5. Quantity
6. Part no.

** Note. Data plate, (refer to Frame 6), can be accessed by removing front panel, (refer to Frame 45).*

When replacing any part on this appliance use only spare parts that you can be assured conform to the safety and performance specification that we require. Do not use reconditioned or copy parts that have not been clearly authorised by Ideal boilers.

| Key No. | Description | | Qty. Per boiler | Part No. |
|---|---|---|---|---|
| 3 | Pressure Gauge | | 1 | 172 669 |
| 8 | Fan | F80-F120 | 1 | 174 375 |
| | | F160-F280 | 1 | 174 376 |
| 9 | Gas Valve | F80-F120 | 1 | 174 377 |
| | | F160 | 1 | 174 378 |
| | | F200-F280 | 1 | 174 379 |
| 12 | Control Module | F80 | 1 | 174 385 |
| | | F120 | 1 | 174 386 |
| | | F160 | 1 | 174 387 |
| | | F200 | 1 | 174 388 |
| | | F240 | 1 | 174 389 |
| | | F280 | 1 | 174 390 |
| 13 | Display Board | | 1 | 172 660 |
| 14 | Alarm / Boiler Run Relays Board | | 1 | 174 391 |
| 21 | Water Pressure Switch | | 1 | 172 667 |
| 26 | Burner | F80 | 1 | 174 405 |
| | | F120 | 1 | 174 406 |
| | | F160 | 1 | 174 407 |
| | | F200 | 1 | 174 408 |
| | | F240 | 1 | 174 409 |
| | | F280 | 1 | 174 410 |
| 28 | Gasket - Burner Manifold | | 1 | 174 412 |
| 29 | Gasket - Fan | F80-F280 | 1 | 174 413 |
| 30 | Gasket - Fan | F80-F120 | 1 | 174 414 |
| 31 | Thermistor (temperature sensor) | | 4 | 174 415 |
| 33 | Air Pressure Switch | | 1 | 174 418 |
| 36 | Transformer | | 1 | 172 657 |
| 37 | Relay | | 2 | 172 658 |
| 47 | Ignition / Detection Electrode | | 1 | 174 432 |
| 51 | Control Module Fuses | | 1 | 172 663 |
| 52 | Mains Fuse | | 1 | 174 449 |

## 62 SHORT LIST

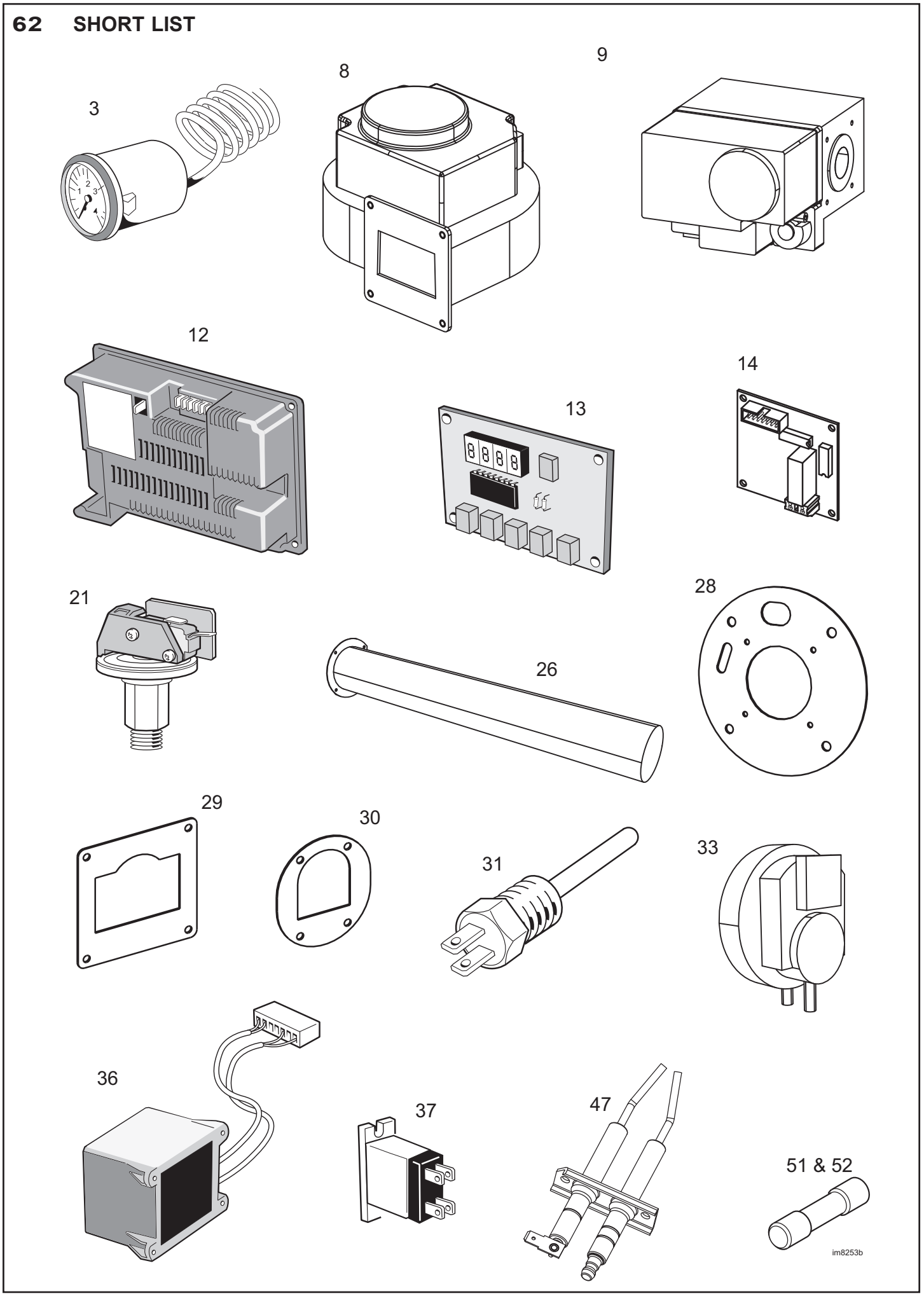

# NOTES

## Technical Training

The Ideal Boilers Technical Training Centre offers a series of first class training courses for domestic, commercial and industrial heating installers, engineers and system specifiers. For details of courses please ring: ..... 01482 498 432

**Ideal Boilers**, P.O. Box 103, National Ave, Kingston upon Hull, HU5 4JN. Telephone: 01482 492 251 Fax: 01482 448 858. Registration No. London 322 137.

**Ideal Stelrad Group** pursues a policy of continuing improvement in the design and performance of its products. The right is therefore reserved to vary specification without notice.

BOILERS Ideal
The High Efficiency Pioneers

Ideal Stelrad Group

***Ideal Installer/Technical Helpline: 01482 498 376***
***www.idealboilers.com***